TM 11-899

DEPARTMENT OF THE ARMY TECHNICAL MANUAL

RADIO RECEIVER R-320/FRC

DEPARTMENT OF THE ARMY • OCTOBER 1949

DEPARTMENT OF THE ARMY TECHNICAL MANUAL

TM 11-899

RADIO RECEIVER R-320/FRC

DEPARTMENT OF THE ARMY • OCTOBER 1949

United States Government Printing Office
Washington : 1949

DEPARTMENT OF THE ARMY
WASHINGTON 25, D. C., *25 October 1949*

TM 11-899 is published for the information and guidance of all concerned.
[AG 300.7 (26 Apr 49)]

BY ORDER OF THE SECRETARY OF THE ARMY:

J. LAWTON COLLINS
Chief of Staff, United States Army

OFFICIAL:
EDWARD F. WITSELL
Major General
The Adjutant General

DISTRIBUTION:
Tech Sv (2) except 11 (50); Arm & Sv Bd (1); AFF Bd (ea Sv Test Sec) (1); AFF (5); OS Maj Comd (5); Base Comd (3); MDW (5); A (5); CHQ (2); FC (2); Sch (2) except 11 (10); Gen Dep (2); Dep 11 (5); Tng Div (2); PE (10), OSD (2); Lab 11 (2); 4th & 5th Ech Maint Shops 11 (2); Two (2) copies to each of the following T/O&E's: 11-47; 11-107; 11-127; 11-587; 11-592; 11-597; SPECIAL DISTRIBUTION.
For explanation of distribution formula, see SR 310-90-1.

CONTENTS

	Paragraph	Page
CHAPTER 1. INTRODUCTION.		
Section I. General	1–2	1
II. Description and data	3–8	1
CHAPTER 2. OPERATING INSTRUCTIONS.		
Section I. Service upon receipt of Radio Receiver R–320/FRC	9–12	5
II. Controls	13	9
III. Operation under usual conditions	14–16	11
IV. Operation under unusual conditions	17–20	13
CHAPTER 3. ORGANIZATIONAL MAINTENANCE INSTRUCTIONS.		
Section I. Organizational tools and equipment	21–22	14
II. Preventive maintenance services	23–25	15
III. Lubrication and weatherproofing	26–28	15
IV. Trouble shooting at organizational maintenance level	29–32	17
CHAPTER 4. THEORY	33–48	20
CHAPTER 5. FIELD AND DEPOT MAINTENANCE INSTRUCTIONS.		
Section I. Prerepair procedures	49–52	37
II. Trouble shooting at field and depot maintenance level	53–64	39
III. Repairs	65–66	51
IV. Alinement procedures	67–69	54
V. Final testing	70–72	62
CHAPTER 6. SHIPMENT AND LIMITED STORAGE AND DEMOLITION TO PREVENT ENEMY USE.		
Section I. Shipment and limited storage	73–74	66
II. Demolition of matériel to prevent enemy use	75–76	66
APPENDIX I. REFERENCES		67
II. IDENTIFICATION TABLE OF PARTS		69
INDEX		86

WARNING

HIGH VOLTAGE

is used in the operation of
this equipment.

DEATH ON CONTACT

may result if operating personnel
fail to observe safety precautions.

First Aid for Electric Shock

RESCUE.

In case of electric shock, shut off the high voltage at once and ground the circuits. If the high voltage cannot be turned off without delay, free the victim from contact with the live conductor as promptly as possible. Avoid direct contact with either the live conductor or the victim's body. Use a dry board, dry clothing, or other nonconductor to free the victim. An ax may be used to cut the high-voltage wire. Use extreme caution to avoid the resulting electric flash.

SYMPTOMS.

a. Breathing stops abruptly in electric shock if the current passes through the breathing center at the base of the brain. If the shock has not been too severe, the breath center recovers after a while and normal breathing is resumed, provided that a sufficient supply of air has been furnished meanwhile by artificial respiration.

b. The victim is usually very white or blue. The pulse is very weak or entirely absent and unconsciousness is complete. Burns are usually present. The victim's body may become rigid or stiff in a very few minutes. This condition is due to the action of electricity and is not to be considered rigor mortis. Artificial respiration must still be given, as several such cases are reported to have recovered. The ordinary and general tests for death should never be accepted.

TREATMENT.

a. Start artificial respiration immediately. At the same time send for a medical officer, if assistance is available. Do not leave the victim unattended. Perform artificial respiration at the scene of the accident, unless the victim's or operator's life is endangered from such action. *In this case only*, remove the victim to another location, but no farther than is necessary for safety. If the new location is more than a few feet away, artificial respiration should be given while the victim is being moved. If the method of transportation prohibits the use of the Shaeffer prone pressure method, other methods of resuscitation may be used. Pressure may be exerted on the front of the victim's diaphragm, or the direct mouth-to-mouth method may be used. Artificial respiration, once started, must be continued, without loss of rhythm.

b. Lay the victim in a prone position, one arm extended directly overhead, and the other arm bent at the elbow so that the back of the hand supports the head. The face should be turned away from the bent elbow so that the nose and mouth are free for breathing.

c. Open the victim's mouth and remove any foreign bodies, such as false teeth, chewing gum, or tobacco. The mouth should remain open, with the tongue extended. Do not permit the victim to draw his tongue back into his mouth or throat.

d. If an assistant is available during resuscitation, he should loosen any tight clothing to permit free circulation of blood and to prevent restriction of breathing. He should see that the victim is kept warm, by applying blankets or other covering, or by applying hot rocks or bricks wrapped in cloth or paper to prevent injury to the victim. The assistant should also be ever watchful to see that the victim does not swallow his tongue. He should continually wipe from the victim's mouth any frothy mucus or saliva that may collect and interfere with respiration.

e. The resuscitating operator should straddle the victim's thighs, or one leg, in such manner that:

(*1*) the operator's arms and thighs will be vertical while applying pressure on the small of the victim's back;

(*2*) the operator's fingers are in a natural position on the victim's back with the little finger lying on the last rib;

(*3*) the heels of the hands rest on either side of the spine as far apart as convenient without allowing the hands to slip off the victim;

(*4*) the operator's elbows are straight and locked.

f. The resuscitation procedure is as follows:

(*1*) Exert downward pressure, not exceeding 60 pounds, for 1 second.

(*2*) Swing back, suddenly releasing pressure, and sit on the heels.

(*3*) After 2 seconds rest, swing forward again, positioning the hands exactly as before, and apply pressure for another second.

g. The forward swing, positioning of the hands, and the downward pressure should be accomplished in one continuous motion, which requires 1 second. The release and backward swing require 1 second. The addition of the 2-second rest makes a total of 4

TL15338-D

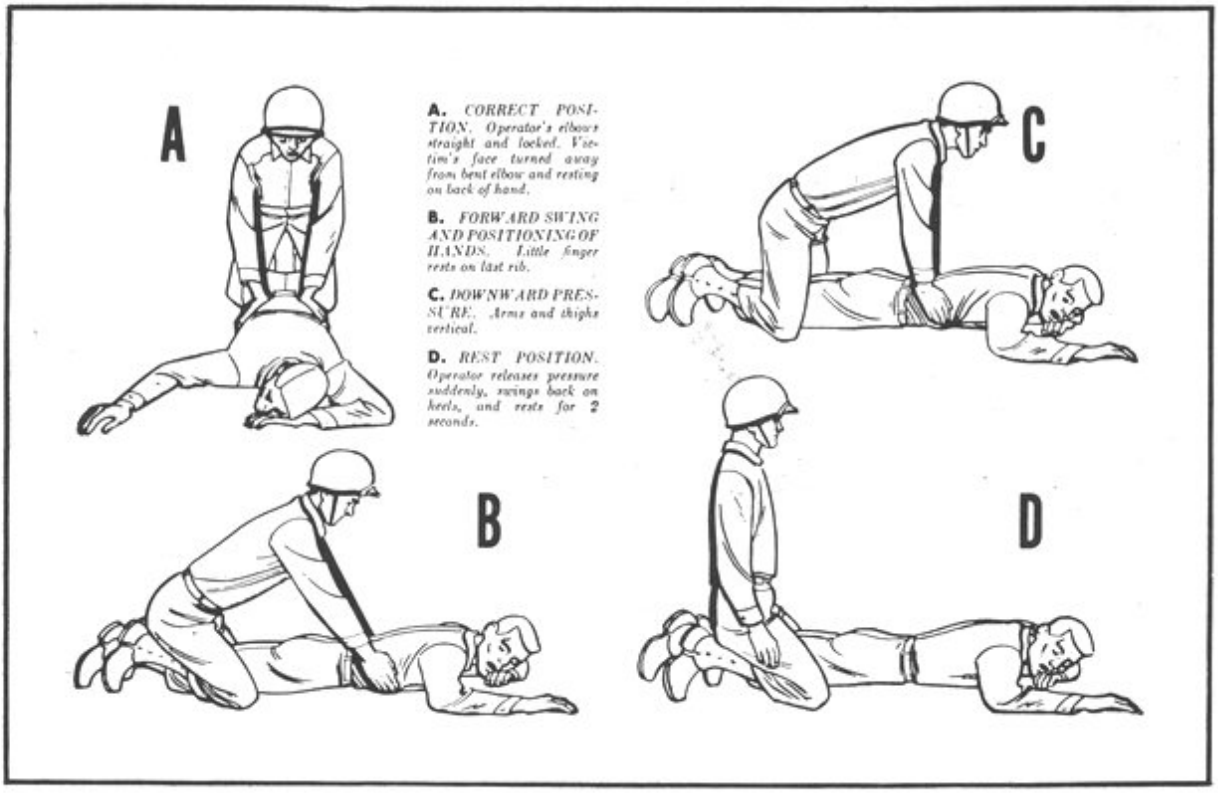

seconds for a complete cycle. Until the operator is thoroughly familiar with the correct cadence of the cycle, he should count the seconds aloud, speaking distinctly and counting evenly in thousands. Example: one thousand and one, one thousand and two, etc.

h. Artificial respiration should be continued until the victim regains normal breathing or is pronounced dead by a medical officer. Since it may be necessary to continue resuscitation for several hours, relief operators should be used if available.

RELIEVING OPERATOR.

The relief operator kneels beside the operator and follows him through several complete cycles. When the relief operator is sure he has the correct rhythm, he places his hands on the operator's hands without applying pressure. This indicates that he is ready to take over. On the backward swing, the operator moves and the relief operator takes his position. The relieved operator follows through several complete cycles to be sure that the new operator has the correct rhythm. He remains alert to take over instantly if the new operator falters or hesitates on the cycle.

STIMULANTS.

a. If an inhalant stimulant is used, such as aromatic spirits of ammonia, the individual administering the stimulant should first test it himself to see how close he can hold the inhalant to his own nostril for comfortable breathing. Be sure that the inhalant is not held any closer to the victim's nostrils, and then for only 1 or 2 seconds every minute.

b. After the victim has regained consciousness, he may be given hot coffee, hot tea, or a glass of water containing ½ teaspoon of aromatic spirits of ammonia. *Do not give any liquids to an unconscious victim.*

CAUTIONS.

a. After the victim revives, keep him LYING QUIETLY. Any injury a person may have received may cause a condition of shock. Shock is present if the victim is pale and has a cold sweat, his pulse is weak and rapid, and his breathing is short and gasping.

b. Keep the victim lying flat on his back, with his head lower than the rest of his body and his hips elevated. Be sure that there is no tight clothing to restrict the free circulation of blood or hinder natural breathing. Keep him warm and quiet.

c. A resuscitated victim must be watched carefully as he may suddenly stop breathing. *Never leave a resuscitated person alone until it is CERTAIN that he is fully conscious and breathing normally.*

TL15338-E

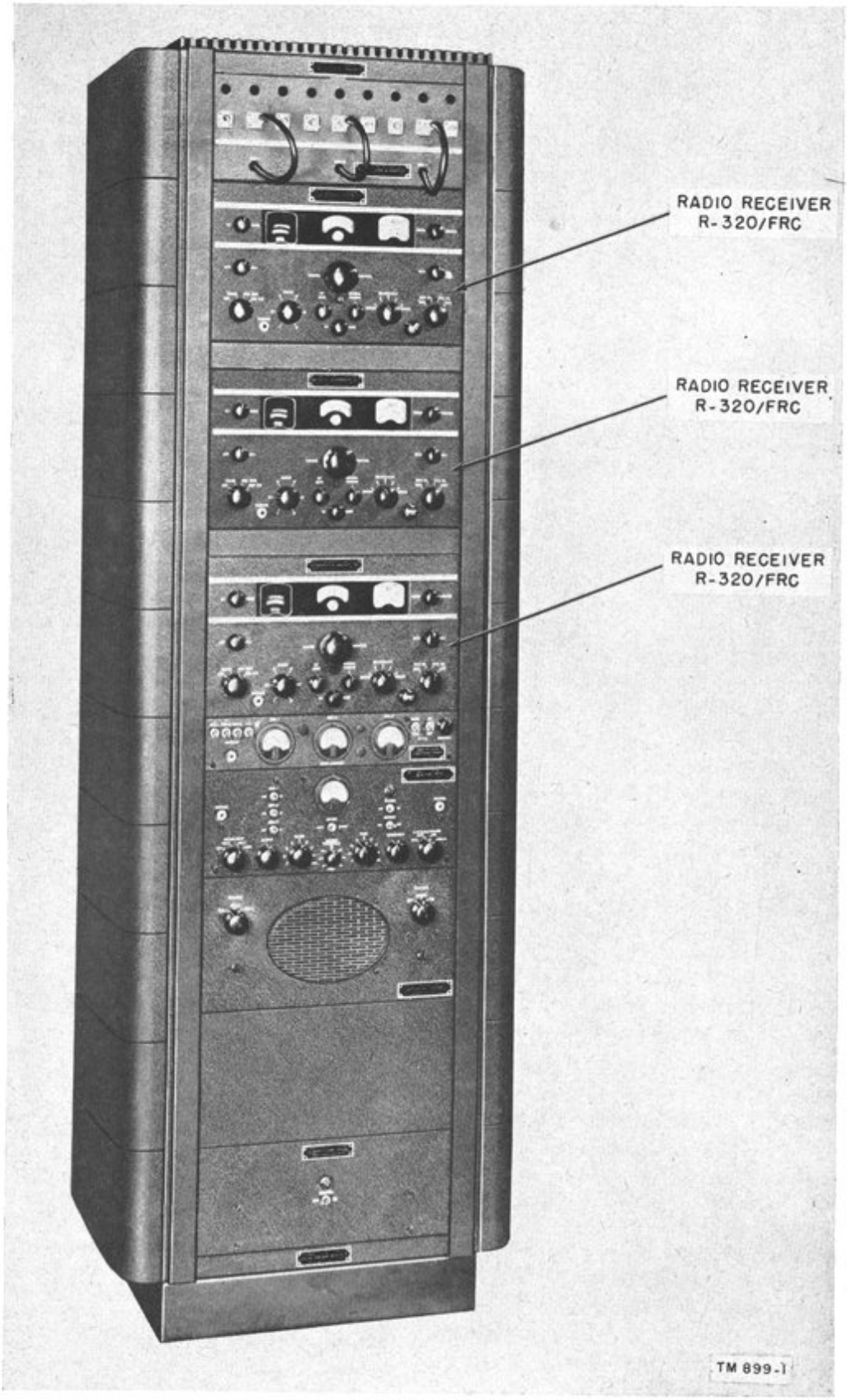

Figure 1. Radio Receivers R-320/FRC installed as components of Radio Receiver Assembly OA-58A/FRC.

CHAPTER 1

INTRODUCTION

Section I. GENERAL

1. Scope

This technical manual contains instructions for the installation, operation, maintenance, and repair of Radio Receiver R–320/FRC (fig. 1). In addition to these instructions there are two appendixes covering a list of references and an identification table of parts.

2. Forms and Records

The forms listed below are used in reporting receipt, operation, and maintenance of the equipment. Use other forms and records as authorized.

NME Form 6	Report of Damaged or Improper Shipment.
DA AGO Form 468	Unsatisfactory Equipment Report.
AF Form 54	Unsatisfactory Report.

a. NME Form 6 (Report of Damaged or Improper Shipment). NME Form 6 will be filled out and forwarded in accordance with AR 700–30—AFR 67–5, when equipment is received in a damaged condition or when it is necessary to report unsatisfactory preservation, packaging, packing, marking, loading, unloading, and handling of supplies.

b. DA AGO Form 468 (Unsatisfactory Equipment Report) for Equipment Used by the Army. DA AGO Form 468 will be filled out and forwarded through channels to the Office of the Chief Signal Officer, Washington 25, D. C., when trouble occurs more often than is normal, as determined by qualified repair personnel.

c. AF Form 54 (Unsatisfactory Report) for Equipment Used by the Air Force. AF Form 54 will be filled out and forwarded to Commanding General, Air Matériel Command, Wright-Patterson Air Force Base, Dayton, Ohio, in accordance with AF Regulation 15–54.

Section II. DESCRIPTION AND DATA

3. Purpose and Use

a. Radio Receiver R–320/FRC is a general purpose communications receiver. It is a 14-tube, superheterodyne receiver of the rack-mounting type, with a frequency range of 535 kc (kilocycles) to 32 mc (megacycles). It can be used to receive c-w (continuous-wave), m-c-w (modulated-continuous-wave), or a-m (amplitude-modulated) signals. Radio Receiver R–320/FRC is intended for fixed-station use and not for mobile operation. The additional equipment required for the operation of this receiver is shown in figure 2.

b. This receiver is designed for use in diversity receiving equipment (fig. 1) or as an individual receiver for rebroadcast pick-up, airbase-to-airbase service, island-to-island service, and ship-to-shore service. The installation and operation of Radio Receiver R–320/FRC as a component of Radio Receiver Assembly OA–58A/FRC is described in TM 11–889A.

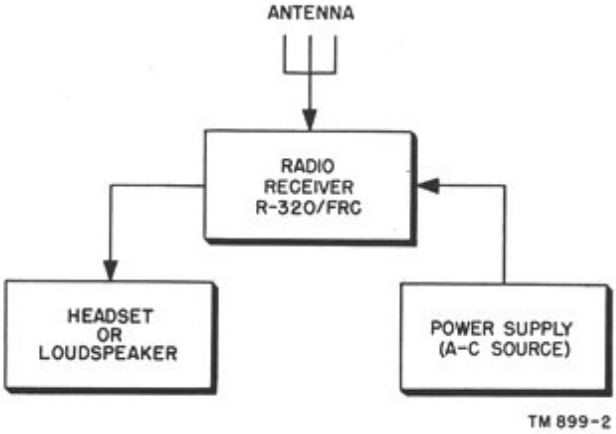

Figure 2. Block diagram of equipment used with Radio Receiver R–320/FRC.

c. Radio Receiver R–320/FRC is similar to the radio receivers (RCA models AR–88D and F) described in TM 11–880. The principal differences in the equipments are as follows:

(1) One radio receiver (RCA model AR–88F) has a screw driver adjustment on the top of the chassis instead of a CRYSTAL PHASING control on the front panel and has provisions on the rear of the chassis for attaching a battery or vibrator pack power supply.

(2) The other radio receiver (RCA model AR–88D), in addition to the difference in (1) above, is completely inclosed in a metal cabinet for table mounting. It does not have a DIVERSITY IF GAIN control, but it does have provisions on the rear of the chassis for connection to a transmitter relay instead of to a diversity equipment keyer.

4. Technical Characteristics

Frequency range (fig. 3):

Band 1	535 to 1,600 kc.
Band 2	1,570 to 4,550 kc.
Band 3	4,450 to 12,150 kc.
Band 4	11,900 to 16,600 kc.
Band 5	16,100 to 22,700 kc.
Band 6	22,000 to 32,000 kc.
Types of signals received.	Cw, mcw, or a-m voice.
Antenna	Various types such as rhombic, long-wire, etc.
Number of tubes.	14.
Type of receiver.	Superheterodyne.
I. f. (intermediate frequency).	455 kc.
Output impedance.	2.5 and 600 ohms.
Maximum undistorted output.	Approximately 2.5 watts.
Power input	Approximately 100 watts.
Power supply	110-, 125-, 150-, 210-, or 240-volt, 50- to 60-cycle ac (alternating current).
Size	19¼ inches wide, 11 inches high, and 19¼ inches deep.
Weight	Approximately 98 pounds.

5. Table of Components

A list of components, quantities, and dimensions is given in the following table:

Component	Req No.	Height (in.)	Depth (in.)	Length (in.)	Volume (cu ft)	Weight (lb)
Radio Receiver R–320/FRC	1	11	19¼	19¼	2. 37	98
Set of running spares (fig. 4)	1	3½	4	8¾	. 14	1
TM 11–899	2	¼	10¼	7⅞	. 011	0. 4

Note. This list is for general information only. See appropriate publications for information pertaining to the requisition of spare parts.

6. Packaging Data

a. When packaged for export shipment, Radio Receiver R–320/FRC and its running spares are placed in moistureproof-vaporproof containers and packed in two wooden export crates. An exploded view of the packaged equipment is shown in figure 8. The size, weight, and volume of each crate are given in the following chart:

Note. Items may be packaged in a manner different from that shown, depending on supply channel.

Number of crates	Height (in.)	Width (in.)	Depth (in.)	Volume (cu ft)	Weight (lb)
1	19	29	27	8. 60	190
1	6	12	8	0 33	10

b. The following list indicates the contents of each case. Refer to the packing list attached to each case for exact contents.

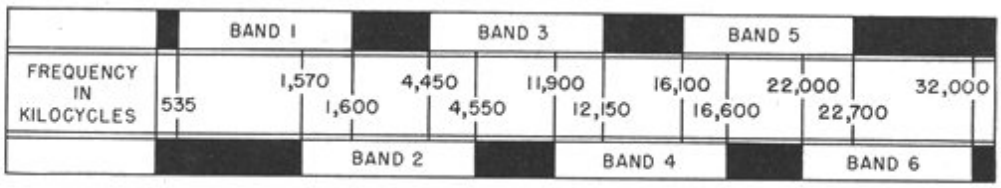

TM 899-3

Figure 3. Receiver frequency range chart.

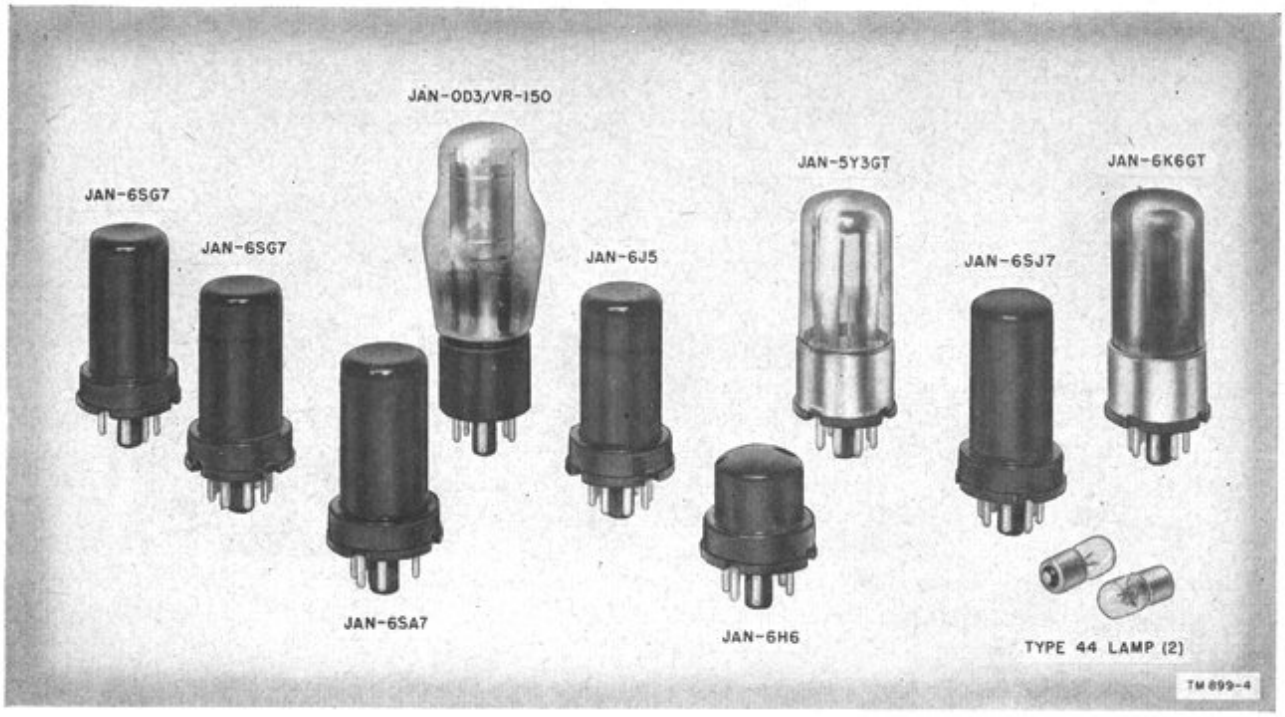

Figure 4. Running spares supplied with receiver.

Figure 5. Radio Receiver R-320/FRC, front view.

Case dimensions (in.)	Contents	Notes
19 x 29 x 27	Radio Receiver R-320/FRC.	Complete with tubes and power cord.
6 x 12 x 8	Running spares . . .	Contains tubes and pilot lamps.

7. Detailed Description of Radio Receiver R-320/FRC (fig. 5 and 6)

a. Radio Receiver R-320/FRC is a 14-tube superheterodyne receiver designed for reception of c-w, m-c-w, and a-m signals within the range of 535 kc to 32 mc. On the front panel of Radio Receiver R-320/FRC (fig. 5) are mounted a tuning dial, a vernier band-spread dial, a manual TUNING CONTROL knob, and 12 circuit control knobs. The receiver covers the frequency spectrum through six bands that are switched in and out by operation of the RANGE control. With each band switch, a mask on the main tuning dial moves to expose the band in use for that setting, and the proper set of coils for the band is connected to the antenna, r-f (radio-frequency) amplifiers, and h-f (high-frequency) oscillator.

b. The receiver is designed for rack-mounting or cabinet-mounting, as shown in figure 1. The chassis is not supplied with dust covers. All tubes (fig. 6) and components mounted on top of the chassis are exposed. All cabling terminals, a line voltage selector switch, antenna and ground connection posts, a monitor jack, and line cord and plug are attached at the rear of the receiver.

8. Additional Equipment Required

The following material is *not* supplied as part of Radio Receiver R-320/FRC but is necessary for its operation.

a. Radio Receiver R-320/FRC requires an antenna. For general use on all bands, a straight-wire antenna between 25 and 50 feet long is suitable. On all bands, except band 1, it is possible to use an antenna with a balanced-line feed. A rhombic antenna is suitable.

b. Either a high-impedance headset or a loudspeaker (2.5 to 3.2 ohms) is required for monitoring the output of the receiver. Facilities are included for using both headset and speaker simultaneously.

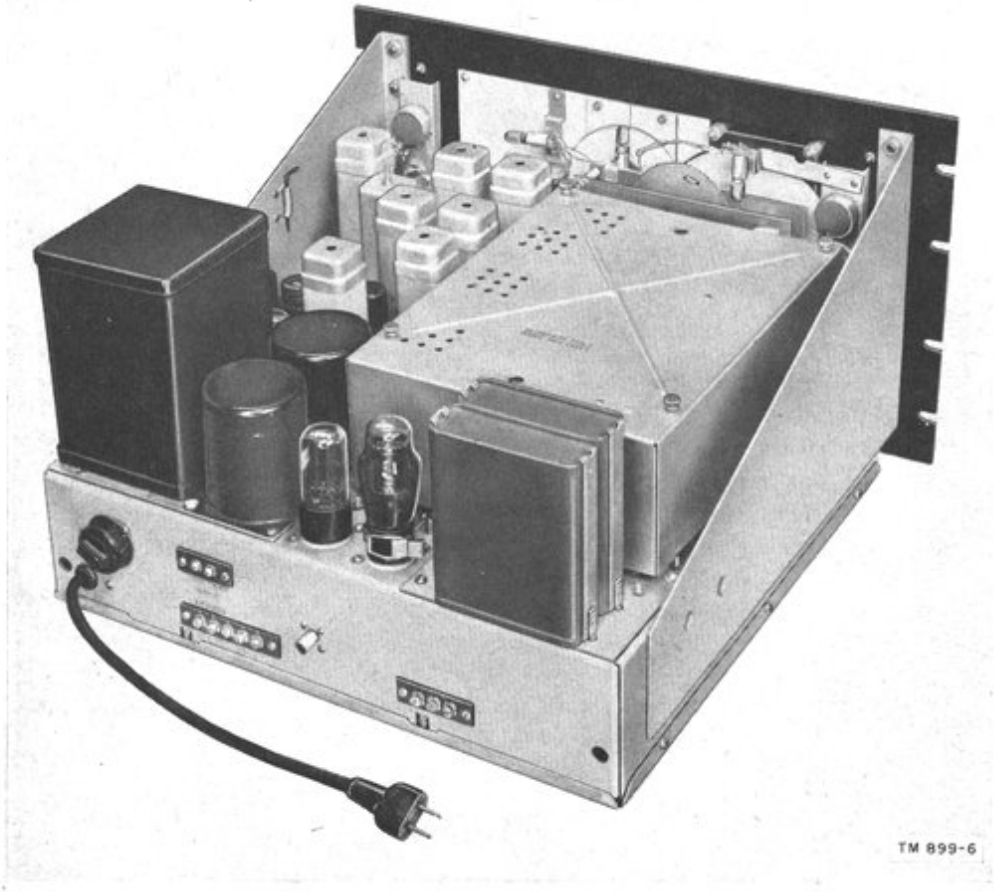

Figure 6. Radio Receiver R-320/FRC, rear view.

CHAPTER 2
OPERATING INSTRUCTIONS

Section I. SERVICE UPON RECEIPT OF RADIO RECEIVER R-320/FRC

9. Siting

Best reception is obtained with Radio Receiver R-320/FRC when the antenna is located in an open area with no large structures nearby which might tend to attenuate the incoming signal. Avoid operation near steel bridges and buildings. Figure 7 illustrates good and bad sites for radio reception.

10. Uncrating, Unpacking, and Checking New Equipment

Note. For used or reconditioned equipment, refer to paragraph 12.

a. General. Equipment may be shipped in oversea or domestic packing cases (fig. 8). When new equipment is received, select a location where the equipment can be unpacked without exposure to the elements and which is convenient to the permanent or semipermanent installation of the equipment. The instructions in *b* below apply to equipment shipped in export packing cases, and the instructions in subparagraph *e* apply to equipment shipped in domestic packing cases.

Caution: Be careful in uncrating, unpacking, and handling the radio receiver; it is easily damaged. If it becomes damaged or exposed, a complete overhaul might be required or the receiver might be rendered useless.

b. Step-by-Step Instructions for Uncrating and Unpacking Export Shipments (fig. 8).

(1) Place the packing case as near the operating position as convenient.
(2) Cut and fold back the steel straps.
(3) Remove the nails with a nail puller. Remove the top and one side of the packing case. Do not attempt to pry off the side and top; the equipment may be damaged.
(4) Remove the waterproof barrier and excelsior covering the equipment inside the case.
(5) Remove the carton from the case and place it on a workbench on another clean dry place.
(6) Inspect the carton for possible damage during shipment.

c. Opening Cardboard Containers (fig. 8).

(1) Use a sharp-pointed instrument to open the outer carton, the moistureproof-vaporproof barrier, and the inner carton.
(2) Remove the top pad, blocking cells, collars, and bags of desiccant.
(3) Lift out the radio receiver from the inner carton and place it on a workbench or other secure flat support.

d. Checking. Check the contents of the carton against the master packing slip. Check for broken tubes, and check that tubes and crystals are inserted in the correct position (fig. 24).

e. Unpacking Domestic Packing Cases. The radio receivers may be received in a domestic packing case. Cut the steel straps; then follow the instructions given in *c* and *d* above.

Note.—Save the original packing cases and containers for both export and domestic shipments. They can be used again when the equipment is repacked for storage or shipment.

11. Connections

a. A-C Power Operation. Determine the frequency and line voltage of the available power source and check these against the list in paragraph 4. If the power supply is the same as any of the ratings listed there, it may be used. The primary winding of the power supply is tapped to allow for the use of a number of different line voltages. These taps are brought out to a line voltage selector switch (S-105) at the left rear of the chassis (fig. 9). The particular voltage for which the switch is set can be read directly

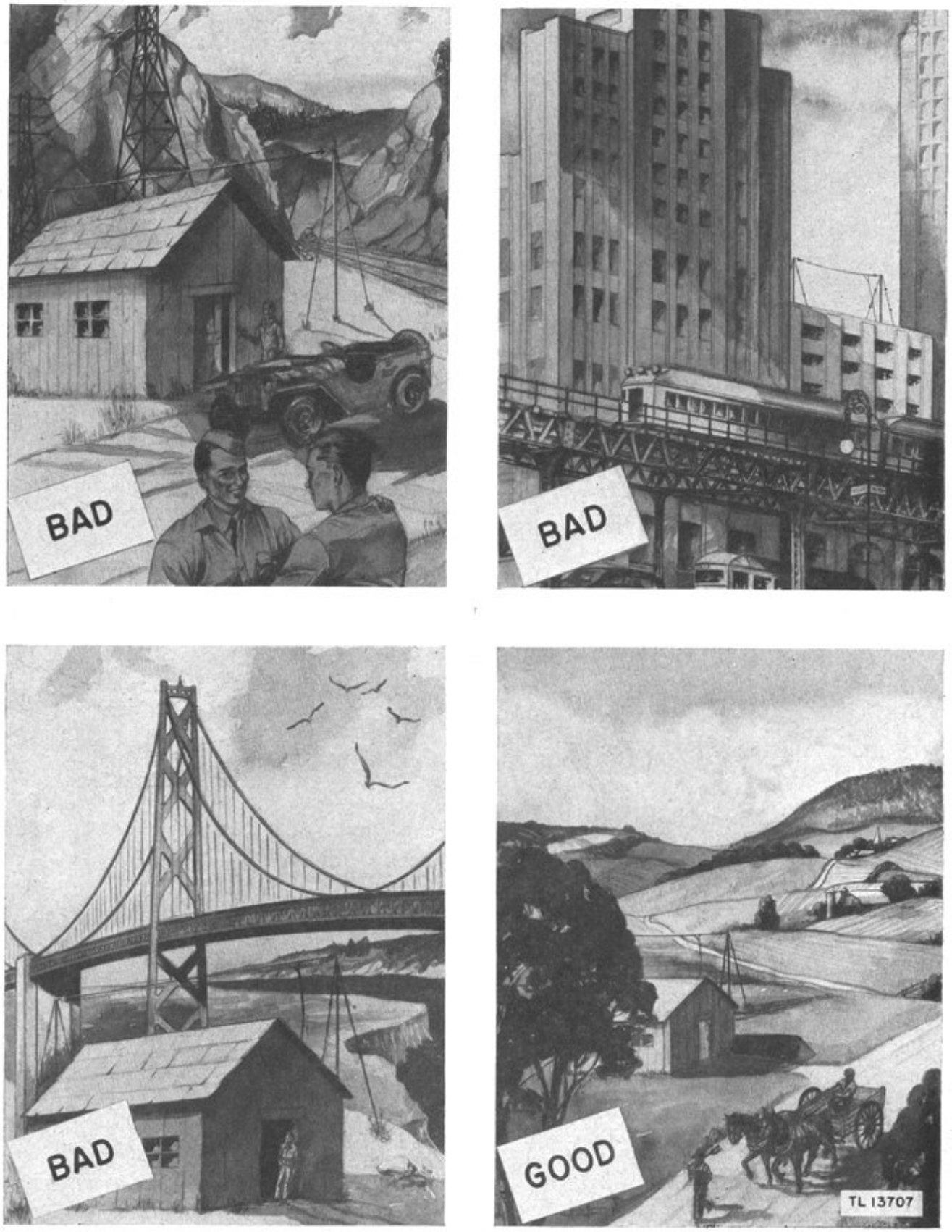

Figure 7. Siting, good and bad locations.

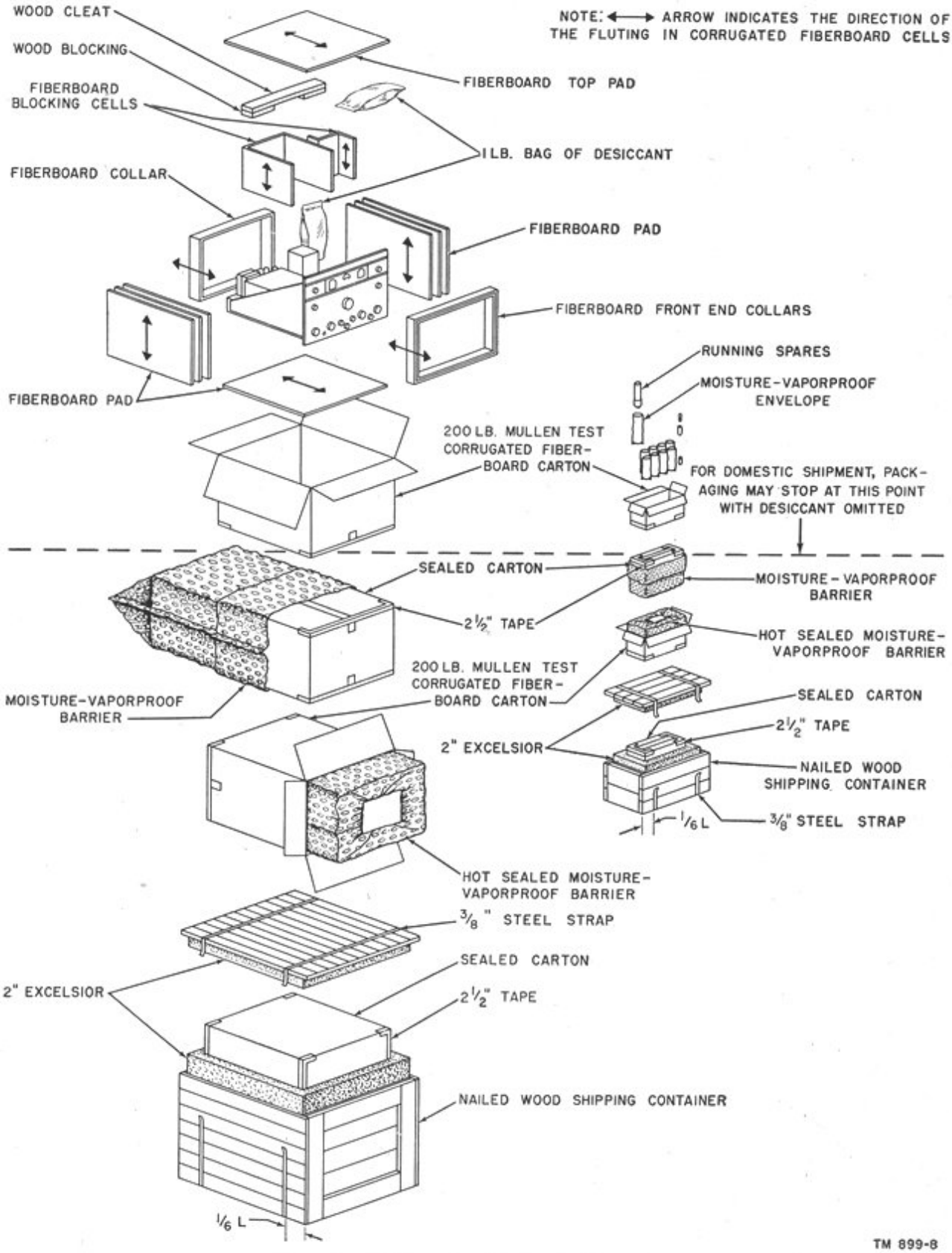

Figure 8. Packing and packaging of radio receiver.

through a port on the switch face. To change the setting, loosen the setscrew and rotate the switch until the desired reading appears. When the selection has been made, tighten the setscrew.

Caution: Before making final connections to a power source, be positive that the line voltage selector switch is set for receiver operation at the voltage rating of the available power supply.

b. Antenna Connections. Antenna terminal board E–101 is at the right rear of the chassis (fig. 9). This terminal board has a G terminal for a ground connection, a center terminal (unmarked) for use when operating the receiver from a balanced 200-ohm transmission line, and an A terminal for use with a straight-wire antenna. For general use, a straight-wire antenna 25 to 50 feet long is used, and a shorting link is connected between the G and center terminals. On frequency bands other than band 1, a balanced 200-ohm transmission line may be connected to the center and A terminals.

(1) *Straight-wire antenna connection.* To operate the receiver on a straight-wire antenna, do not disturb the shorting link between the center and G terminals. Connect the antenna to the A terminal, and connect a good ground to the G terminal.

Note.—To meet the FCC requirements for operation of the receiver on shipboard, install a bus wire between the center terminal of E–101 and the receiver ground (chassis).

(2) *Balanced transmission line input.* When operating the receiver on a balanced 200-ohm transmission line, open the link between the center and G terminals. Connect the transmission line to the center and A terminals.

c. Speaker Connections. There are two output terminal strips at the left rear of the chassis; E–103 with two terminals on the top strip and E–102 with five terminals on the bottom strip (fig. 9). The upper strip (E–103) has two ungrounded terminals for use in feeding a balanced 600-ohm line. The terminals marked 1 and 2 on the lower strip (E–102) are to be used for connecting a 2.5- to 3.2-ohm speaker. Make the connections as required.

d. Diversity Reception. See TM 11–889A for detailed instructions on operating the receiver in a diversity combination. When the receiver is not used in diversity, terminals 3, 4, and 5 on E–102 are not to be connected to any external equipments, and a jumper link must be installed across terminals 4 and 5 to complete the diode circuit for individual receiver operation (fig. 9).

e. Headphone Connections. A two-position jack is provided on the left side of the front panel (fig. 10) for connection to a pair of headphones. The first position (halfway in) is for reception on both speaker and phones. The second position (full in) is for phone reception only. Connect the phones accordingly.

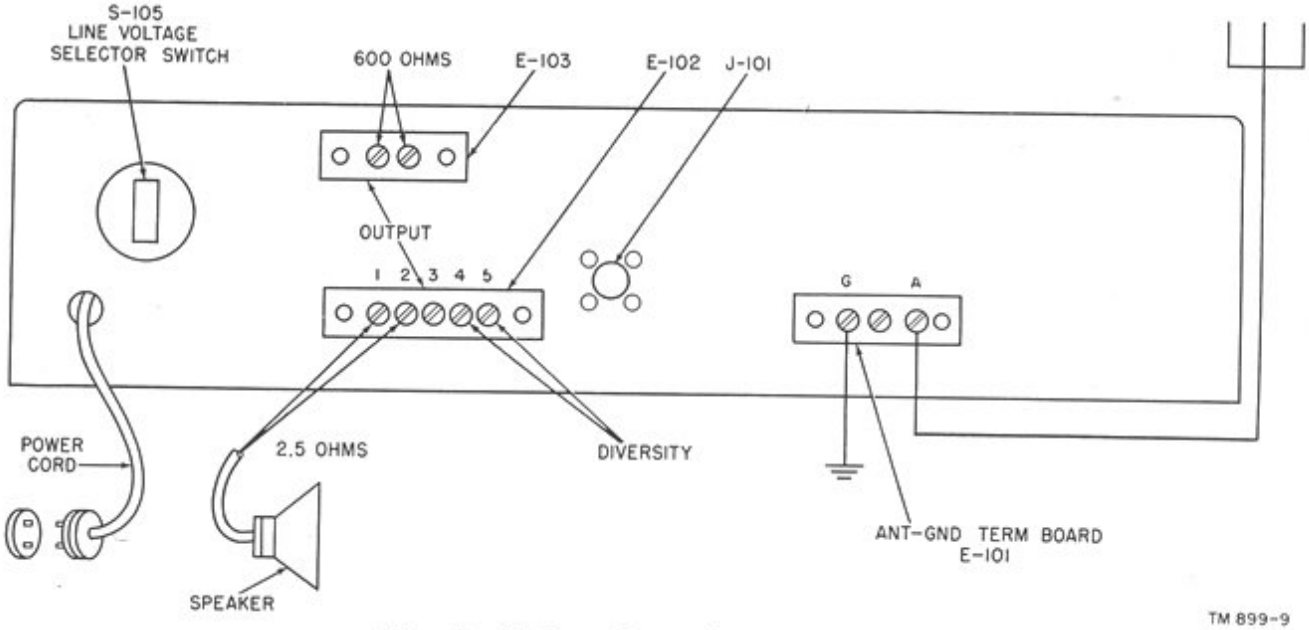

Figure 9. Cording and connections, rear of chassis.

12. Service upon Receipt of Used or Reconditioned Equipment

a. Follow the instructions in paragraph 10 for uncrating, unpacking, and checking the equipment.

b. Check the used or reconditioned equipment for tags or other indications pertaining to changes in the wiring of the equipment. If any changes in wiring have been made, note the change in this manual, preferably on the schematic diagram. Check for broken tubes, and check that the tubes are installed in their correct positions as shown in figure 24.

Section II. CONTROLS

13. Controls and Their Use (fig. 10)

The following table lists the controls of Radio Receiver R-320/FRC and indicates what they do:

Control	Function
Power-transmit-receive switch (S-104).	Energizes and de-energizes circuits of the receiver, as follows: *Position* — *Function* OFF — De-energizes receiver. TRANS — Energizes power supply circuit but leaves plate supply circuits (excluding that of power amplifier V-111) open. REC MOD — Completes plate supply circuit to all stages except bfo (beat-frequency oscillator), thus providing for normal voice reception. REC CW — Turns on bfo, as well as all other stages, thus providing for reception of c-w signals.
RANGE switch (S-101A through S-101H).	Provides for selection of any one of six frequency ranges. When switch is moved to change the frequency range, it selects appropriate tuning coils for r-f, mixer, and oscillator stages and rotates a mask over main tuning dial; dial calibration of selected range is then exposed through a series of spaced slots.
ANT ADJ control (C-102).	Is a variable trimmer capacitor used to aline first r-f amplifier tuned input circuits.
TUNING CONTROL (C-103A through C-103H).	Operates main and vernier tuning dials. These dials are driven through a system of gears which are also coupled to the ganged, main tuning capacitors.
Main tuning dial.	Consists of a disk on which are engraved seven scales, one for each of the six bands and a log scale. Scales provided for the six bands have the following ranges: *Band* — *Range (kc)* 1 — 535 to 1,600 2 — 1,570 to 4,550 3 — 4,450 to 12,150 4 — 11,900 to 16,600 5 — 16,100 to 22,700 6 — 22,000 to 32,000
Vernier tuning dial.	Geared to main tuning dial and operates at the same time. Calibrations on dial are linear, with divisions from 0 to 100. It is used in conjunction with main tuning dial to give additional figures for logging and tabulation of exact log records of particular communication stations.
Tuning lock.	Prevents any movement of main tuning dial due to vibration. To lock, turn lock knob in clockwise direction until it is moderately tight.
NOISE LIMITER control (R-135).	Potentiometer that controls degree of noise-limiting action when noise limiter—avc switch is in MAN NL or AVC NL position. With control in full clockwise position, noise-limiting action is reduced to a minimum and signal is subjected to a minimum of distortion by noise limiter. As control is turned in counterclockwise direction, noise-limiting action increases but distortion of signal also increases. Normally, fully clockwise position (minimum noise-limiting position) should be used, but under extreme noise conditions a compromise must be made for maximum clarity of signal with least noise.

Control	Function
SELECTIVITY switch (S–102A and S–102B).	Provides five degrees of selectivity, from BROAD to SHARP. The first two switch positions are for modulated reception: position 1, being the least selective, provides high-fidelity reception; and position 2 provides normal, modulated reception. In the last three positions a crystal filter is used: position 3 is for normal c-w or selective modulated reception, position 4 is for sharp c-w reception, and position 5 provides for extremely sharp c-w reception.
Noise limiter—avc switch (S–103).	Provides for selection of any one of four different types of operation, as follows: *Position* — *Function* MAN — Output volume must be adjusted manually by use of RF GAIN and AF GAIN controls. In MAN position there is no avc (automatic volume control) or noise-limiting action; therefore, this position is used for c-w reception without the presence of noise interference. MAN NL — Noise-limiting circuit is in operation but there is no avc action. This position is used for c-w reception with the presence of noise. Output volume is adjusted manually. AVC NL — Both the avc and noise-limiting circuits are in operation. This requires that output volume of set be adjusted manually to a desired level, and avc action takes over to maintain that level. Normally, RF GAIN control is set fully clockwise, setting delay voltage for avc comparatively low. Under conditions of extreme noise interference, delay voltage should be increased by setting back (counterclockwise) RF GAIN control. AVC NL position is normally used when receiving modulated signals with presence of noise interference.

Control	Function
Noise limiter—ave switch (S–103).	*Position* — *Function* AVC — Ave action is the same as in AVC NL position but with no noise-limiting action. AVC setting is best used for receiving modulated signals with no noise present.
AF GAIN control (R–142).	Potentiometer which controls input voltage to first a-f (audio-frequency) amplifier (V–110). This control is used in conjunction with RF GAIN control to adjust output volume.
RF GAIN control (R–163).	Potentiometer which controls gain of first and second r-f stages and first and second i-f stages. When receiver is set for manual volume control, RF GAIN control works in conjunction with AF GAIN control to adjust output volume. During avc operation, RF GAIN control sets delay voltage for avc. Normally, this control is set in its fully clockwise position, at which time delay voltage will be low and avc action will take place on reasonably small signals. As control is rotated counterclockwise, a greater delay voltage is developed and avc action does not take place until signal voltage is of greater magnitude than delay voltage.
HF TONE control (R–144).	Potentiometer used to attenuate higher audio frequencies. In fully clockwise position, full tone is obtained. To attenuate higher audio frequencies, control is rotated in counterclockwise direction.
BFO ADJ control (C–188).	A 75-uuf (micromicrofarad) trimmer capacitor used to set audio tone of received c-w signals. After signal has been accurately tuned, adjust this control to desired audio tone.
PHONES jack (J–102).	Two-position jack which allows for selection of either phone or phone-and-speaker output. With phone plug in first position (halfway in), both speaker and phone circuits are closed. With phone plug in second position (fully in), speaker circuit is open, leaving only phones in operation. In addition to 2.5-ohm tapped output winding, a 600-ohm winding is provided to feed a 600-ohm balanced line. If neither the

Control	Function
	Position *Function*
PHONES jack (J–102).	2.5- nor the 600-ohm output circuit is loaded, phone plug should be fully in to prevent improper loading of output circuit with resultant distortion.
DIVERSITY IF GAIN control (R–124).	Potentiometer that controls gain of first and second i-f stages when receiver is used in diversity operation. Normally, control is set at full gain (fully clockwise position).

Control	Function
	Position *Function*
CRYSTAL PHASING control (C–147).	Used to balance out capacitance of crystal holder in crystal-filter circuit. When SELECTIVITY switch is in position 3, 4, or 5, this control provides adjustable rejection of interfering signals close to frequency of desired signal. Rotate this control for maximum rejection of interfering signal.

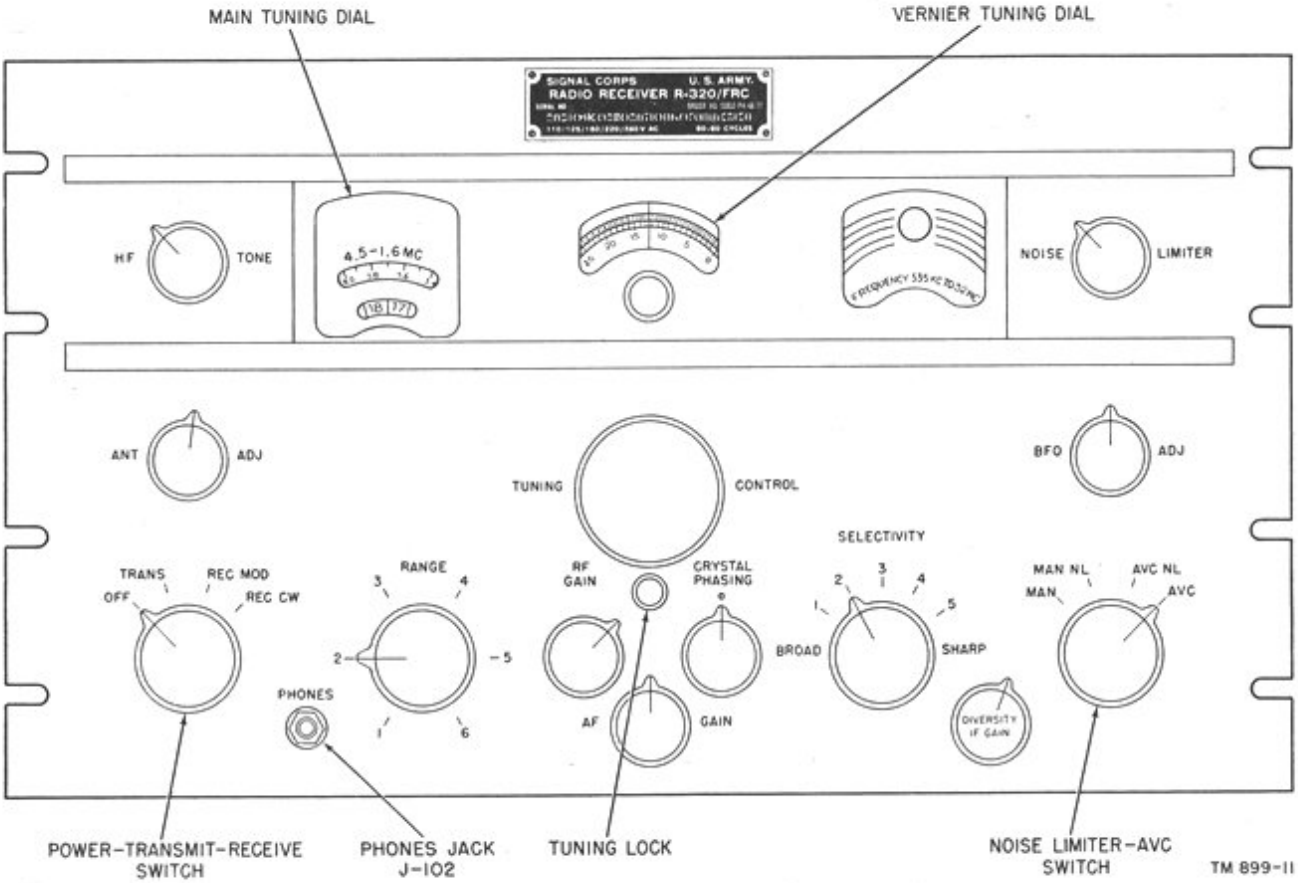

Figure 10. Radio Receiver R–320/FRC, front panel.

Section III. OPERATION UNDER USUAL CONDITIONS

14. Starting Procedure

a. PRELIMINARY. Perform the starting procedures given below before operating the receiver. Operating instructions are given in paragraph 15.

(1) Check the line voltage selector switch (S–105) (fig. 9) to see that it is set at the proper voltage rating for the available power supply.

(2) Connect the power cord to the source of power.

(3) Set the controls listed below as indicated:

Control	Setting
RANGE switch	Set for band to be covered.
TUNING CONTROL	Tune to frequency of required station.
DIVERSITY IF GAIN.	Turn fully clockwise

b. Starting. Set the power-transmit-receive switch (fig. 10) to the TRANS position and allow the filaments to warm up.

15. Operation

Note. If a headset is the only means used for monitoring, plug it into the PHONES jack in the fully in position.

a. C-W Reception. If the receiver is to be used for c-w reception, refer to figure 10 for control locations and proceed as follows:

(1) Move the power-tranmit-receive switch to the REC CW position.
(2) Set the ANT ADJ control for maximum background noise.
(3) Set the SELECTIVITY switch at position 3, 4, or 5 depending on the degree of selectivity required. (See par. 13 for switch function.)
(4) Set the noise limiter—avc switch to the MAN NL position if noise interference is present, or set the switch to the MAN position if no noise is present.
(5) Adjust the RF GAIN control to the fully clockwise position.
(6) Adjust the AF GAIN control to its halfway position.
(7) Readjust the TUNING CONTROL to the required station.
(8) Readjust the RF GAIN and AF GAIN controls to the desired volume level, keeping the RF GAIN as low as possible.
(9) When necessary, adjust the NOISE LIMITER control to a position which provides maximum signal clarity and the least noise.
(10) Reset the SELECTIVITY and noise limiter-avc switches in accordance with requirements of noise interference and adjacent signal interference.
(11) Rotate the CRYSTAL PHASING control, if necessary, to reject an interfering signal on a frequency near that of the desired signal. Readjust the TUNING CONTROL if the CRYSTAL PHASING control is moved.
(12) Set the BFO ADJ control to obtain the desired audio tone.
(13) If the receiver is subject to vibration, tighten the tuning lock.

b. Modulated Reception. If modulated reception is desired after the starting procedure has been completed, refer to figure 10 for control locations and proceed as follows:

(1) Set the power-transmit-receive switch to REC MOD.
(2) Turn the ANT ADJ control for maximum background noise.
(3) Set the SELECTIVITY switch at position 1, 2, or 3, depending on the degree of fidelity and selectivity required. (See par. 13 for switch function.)
(4) Set the noise limiter-avc switch to the AVC NL position if noise interference is present, or set the switch to the AVC position if noise interference is not present.
(5) Turn the RF GAIN control to its fully clockwise position.
(6) Adjust the AF GAIN control to a suitable output level.
(7) Readjust the TUNING CONTROL to the required station.
(8) Reset the AF GAIN control to obtain the desired volume level.
(9) When necessary, adjust the NOISE LIMITER control to a position which provides maximum signal clarity and the least noise.
(10) Reset the SELECTIVITY and noise limiter-avc switches in accordance with requirements of noise interference and adjacent signal interference.
(11) When necessary, readjust the RF GAIN control in a counterclockwise direction under conditions of extreme interference.
(12) Adjust the HF TONE control in a counterclockwise direction if it is desired to attenuate the higher audio frequencies.
(13) If the receiver is subject to vibration, turn the tuning lock until it is moderately tight.

16. Stopping Procedure

To stop the receiver, rotate the power-transmit-receive switch (fig. 10) to the OFF position.

Section IV. OPERATION UNDER UNUSUAL CONDITIONS

17. General

The operation of Radio Receiver R-320/FRC may be difficult where extreme cold, heat, humidity, moisture, or sand conditions, etc., prevail. In the following paragraphs instructions are given on procedures for minimizing the effects of these unusual operating conditions.

18. Operation in Arctic Climates

Subzero temperatures and climatic conditions associated with cold weather affect the efficient operation of the equipment. Instructions and precautions for operation under such adverse conditions follow:

a. Handle the equipment carefully.

b. Keep the equipment warm and dry.

c. When equipment that has been exposed to the cold is brought into a warm room, it will start to sweat and will continue to do so until it reaches room temperature. When the equipment has reached room temperature, dry it thoroughly. This condition also arises when the equipment warms up during the day after exposure during a cold night.

19. Operation in Tropical Climates

When the equipment is operated in tropical climates, where moisture conditions are acute and ventilation is poor, the high relative humidity may cause condensation of moisture on the equipment if the temperature of the equipment becomes lower than the ambient air. To minimize this action, place lighted electric light bulbs under the equipment.

20. Operation in Desert Climates

The main problem which arises with receiver operation in desert areas is the large amount of sand, dust, or dirt which enters the capacitor gearing. Be careful to keep the receiver as free from dust as possible. Make frequent preventive maintenance checks (ch. 3). Pay particular attention to the condition of the gear drive lubrication on the receiver. Excessive amounts of dust, sand, or dirt that come into contact with oil and grease result in grit, which will damage the gear surface.

CHAPTER 3

ORGANIZATIONAL MAINTENANCE INSTRUCTIONS

Section I. ORGANIZATIONAL TOOLS AND EQUIPMENT

21. Tools and Materials Used with Radio Receiver R-320/FRC

The tools and materials contained in Tool Equipment TE-41 (the ordinary hand tools and materials normally available to organizational maintenance personnel) are required for organizational maintenance of the receiver. These tools are listed in Department of the Army Supply Catalog SIG 6-TE-41.

22. Special Tools Supplied with Radio Receiver R-320/FRC

Only two special tools are supplied with Radio Receiver R-320/FRC. These tools are a setscrew wrench and a coil adjustment tool; both are shown in figure 11.

a. Setscrew Wrench. The setscrew wrench is used to loosen and tighten the setscrews on all the control knobs, except the main tuning dial knob. The wrench is retained by a spring clip on the right side of the chassis.

b. Coil Adjustment Tool. The coil adjustment tool is used during alinement for the adjustment of the r-f and i-f coils. This tool is mounted in a pair of fuse clips on the inside of the upper r-f cover.

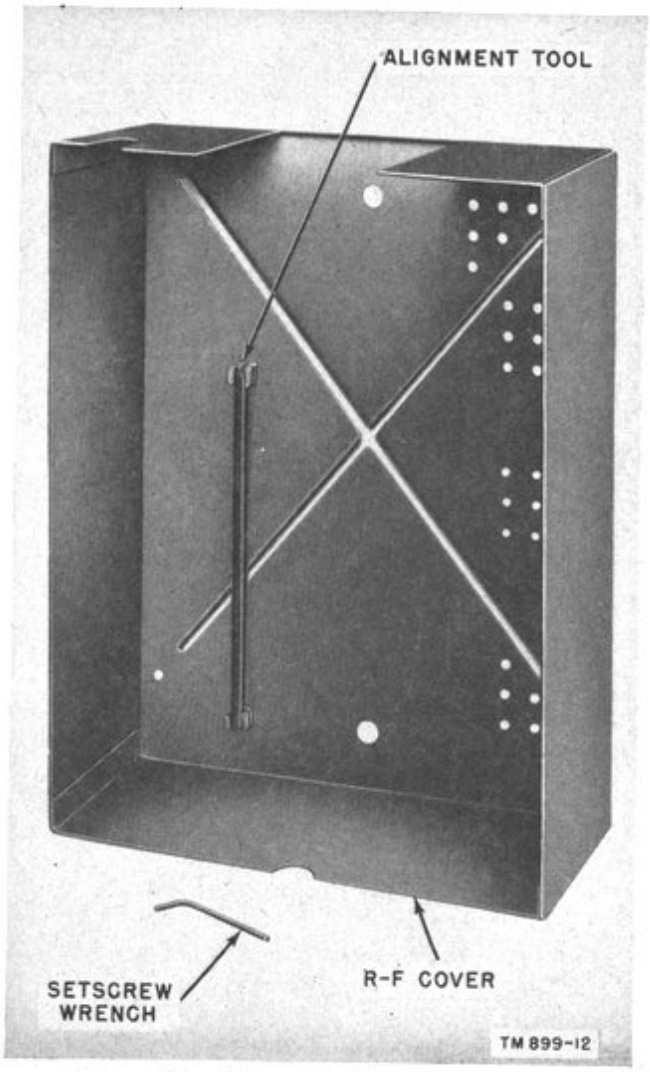

Figure 11. Alinement and maintenance tools.

Section II. PREVENTIVE MAINTENANCE SERVICES

23. Definition of Preventive Maintenance

PM (preventive maintenance) is work performed on the receiver (usually when the equipment is not in use) to keep it in good working order so that break-downs and needless interruptions in service will be kept to a minimum. PM differs from trouble shooting and repair since its object is to eliminate certain troubles before they occur. See TM 38-650.

24. General Preventive Maintenance Techniques

a. Use a clean, dry, lint-free cloth or a dry brush for cleaning.

(1) If necessary, except for electrical contacts, moisten the brush or cloth with Solvent, dry-cleaning (SD); then wipe the parts dry with a dry cloth.

(2) Clean electrical contacts with a dry cloth moistened with carbon tetrachloride; then wipe them dry with a dry cloth.

b. If available, dry compressed air may be used at a line pressure not exceeding 60 pounds per square inch to remove dust from inaccessible places; be careful, however, or mechanical damage from air blast may result.

c. For further information on PM techniques, refer to TB SIG 178.

25. Performing Preventive Maintenance

The following PM operations should be performed by organizational personnel at the intervals indicated, unless these intervals are reduced by the local commander:

Caution: Do not tighten screws, bolts, and nute carelessly. Fittings tightened beyond the pressurs for which they are designed will be damaged or broken.

a. Daily.

(1) Clean exterior of front panel.

(2) Check all knobs for tight fit on shafts.

b. Weekly.

(1) Clean top of chassis and rear of front panel.

(2) Inspect power transformer T-120 for excessive heating.

(3) Examine capacitators C-190 and C-191 for leakage and bulges.

Caution: Disconnect power before performing these operations. When complete, reconnect power and check operation.

c. Monthly. Make visual inspection of the following, tighten and/or clean, *if necessary*:

(1) Tube and crystal sockets and pins, for loose contacts, dirt, and corrosion. Check tubes; replace if necessary (par. 51; fig. 24). Note that tubes including final letters W or Y in their nomenclature can replace tubes of the same type. For example, Tube JAN-6SG7Y can replace Tube JAN-6SG7.

(2) Resistors, for blistering, discoloration, and other evidence of overheating.

(3) All switches, for dirt, loose contacts, corrosion, and other unsatisfactory mechanical operation.

(4) PHONES jack J-102, for loose mounting and dirt, corrosion, and improper spring tension.

Section III. LUBRICATION AND WEATHERPROOFING

26. Improvised Lubrication Order for Radio Receiver R-320/FRC

a. No lubrication order for this equipment is available at the time of publication of this manual. The improvised lubrication order shown in figure 12 will be superseded by the lubrication order when issued.

b. Lubricate the equipment as indicated in figure 12. Except for removal of the top r-f cover and the bottom front r-f cover, no disassembly is required to lubricate the receiver.

27. Weatherproofing

a. General. Signal Corps equipment, when operated under severe climatic conditions such as prevail in tropical, arctic, and desert regions, requires special treatment and maintenance. Fungus growth, insects, dust, corrosion, salt spray, excessive moisture, and extreme temperatures are harmful to most materials.

b. Tropical Maintenance. A special moistureproofing and fungiproofing treatment has been devised to provide a reasonable degree of

REMOVE TOP R-F COVER TO SERVICE

Interval-Lubricant

M PL CAPACITOR SHAFT BEARINGS
1 or 2 drops on each bearing

Q GL DIAL DRIVE GEARS
Clean and coat all gear teeth lightly with lubricant

M PL SHAFT BEARINGS
(Lubricate all shaft bearings) 1 or 2 drops

M PL SWITCH DETENTS
(Lubricate 3 detents) 1 or 2 drops

M GL RANGE SWITCH SHAFT GEAR
Clean surface and coat with light film of lubricant

CAPACITOR SHAFT AND DIAL DRIVE GEARING ASSEMBLY TOP VIEW

LUBRICANTS	INTERVAL
GL-GREASE, lubricating, Instrument (GL)	Q-Quarterly
PL-OIL, lubricating, preservative, special. (PL)	M-Monthly

CLEANING-SOLVENT, dry-cleaning, only will be used to clean parts. Before lubricating clean exposed surfaces of parts with lintless cloth lightly dampened with SOLVENT, dry-cleaning. Do not allow cleaning fluid to get on other parts of receiver.

REMOVE BOTTOM FRONT R-F COVER PLATE TO SERVICE

M PL SWITCH DETENT
1 or 2 drops

NOTE: Intervals given are maximum for normal 8 hour day operation. For abnormal conditions or activities, intervals should be shortened to compensate.

DETENTS AND RANGE SHAFT GEAR BOTTOM VIEW

TM 899-13

Figure 12. Improvised lubrication order for Radio Receiver R-320/FRC.

protection if properly applied. This treatment is fully explained in TB SIG 13 and TB SIG 72.

c. Winter Maintenance. Special precautions necessary to prevent poor performance or total operational failure of equipment in extremely low temperatures are fully explained in TB SIG 66.

d. Desert Maintenance. Special precautions necessary to prevent equipment failure in areas subject to extreme heat, low humidity, and excessive sand and dust are fully explained in TB SIG 75.

e. Lubrication. The effects of extreme heat and cold on materials and lubricants are explained in TB SIG 69. Observe all the precautions outlined in TB SIG 69, and pay strict attention to the lubrication order (par. 26) when operating equipment under these conditions.

28. Rustproofing and Painting

a. If the front panel finish has been badly scarred or damaged, rust and corrosion can be prevented by touching up bared surfaces. Use #00 or #000 sandpaper to clean the surface down to the bare metal; obtain a smooth, bright finish.

Caution: Do not use steel wool. Minute particles frequently enter the equipment and cause harmful internal shorting or grounding of circuits.

b. When a touch-up job is necessary, apply paint with a small brush. When numerous scars and scratches warrant a complete repainting of the front panel, remove all knobs, mask the shafts, jack, dials, and trim, and spray-paint the entire panel. Remove rust spots by cleaning the corroded metal with solvent (SD). In severe cases it may be necessary to use solvent (SD) to soften the rust and to use sandpaper to prepare the spot for painting. Paint used will be authorized and consistent with existing regulations. (See TM 9-2851.)

Section IV. TROUBLE SHOOTING AT ORGANIZATIONAL MAINTENANCE LEVEL

29. Scope

a. The trouble-shooting and repair work that can be performed at the organizational maintenance level (operators and repairmen) is necessarily limited in scope by the tools, test equipment, and replaceable parts issued and by the existing tactical situation. Accordingly, trouble shooting is based on the performance of the equipment and the use of the senses in determining such troubles as burned-out tubes, etc.

b. The paragraphs which follow in this section help in localizing the fault to the defective stage or item, such as a tube or fuse.

30. Visual Inspection

a. Failure of this equipment to operate properly is usually caused by one or more of the following faults:

(1) Improperly connected power cable.

(2) Worn, broken, or disconnected cords or plugs.

(3) Burned-out fuses.

(4) Wires broken because of excessive vibration.

(5) Defective tubes.

(6) Inactive (dirty or cracked) crystal.

b. When failure is encountered and the cause is not immediately apparent, check as many of the above items as is practicable before starting a detailed examination of the component parts of the system. If possible, obtain information from the operator of the equipment regarding performance at the time trouble occurred.

c. Visually inspect the antenna system for obvious abnormalities.

31. Trouble Shooting by Using Equipment Performance Checklist

a. General. The equipment performance checklist (par. 32) will help the operator to locate the trouble in the equipment. The list gives the item to be checked, the conditions under which the item is checked, the normal indications of correct operation, and the corrective measures that the operator can take. *To use this list, follow the items in numerical sequence.*

b. Action or Condition. For some items, the information given in the action or condition column consists of the settings of various switches and controls under which the item is to be checked. For other items it represents an action that must be taken to check the normal indication.

c. Normal Indications. The normal indications listed include the visible and audible signs that the operator should perceive when he checks

the items. If the indications are not normal, the operator should apply the recommended corrective measures.

d. Corrective Measures. The corrective measures listed are those that the operator can make without turning the equipment in for repairs. When reference is made in the table to chapter 5, it indicates that the trouble cannot be corrected during operation and that trouble shooting by an experienced repairman is required. If the set is completely inoperative or if the recommended corrective measures do not yield results, trouble shooting is necessary. However, if the tactical situation requires that communication be maintained, and if the set is not completely inoperative, the operator must maintain the equipment in operation as long as it is possible to do so.

32. EQUIPMENT PERFORMANCE CHECKLIST

	Item No.	Item	Action or condition	Normal indications	Corrective measures
PREPARATORY	1	Antenna.	Antenna connected. Antenna terminal board clean and not cracked.		
	2	Headset.	Headset, if used, plugged in PHONES jack.		
	3	Power cord.	Power cord securely connected.		Clean and tighten power cord connections.
	4	RF GAIN control.	Turn to fully clockwise position.		
	5	AF GAIN control.	Turn to approximate midpoint of its range.		
START	6	Power-transmit-receive switch.	Turn switch to TRANS, REC MOD, and REC CW positions, in turn.	Dial lamps light in all three positions.	Replace lamps; refer to ch. 5.
			Turn switch to REC MOD position.	Rushing noise heard in headphones or speaker after a few seconds.	Refer to ch. 5.
EQUIPMENT PERFORMANCE	7	RANGE switch.	Set to all bands successively.	Normal signal output on all bands.	If output is weak or missing on one or more bands, rotate switch several times to clean contacts; refer to ch. 5.
	8	ANT ADJ control.	Set for maximum background noise.	Background noise varies.	Refer to ch. 5.
	9	SELECTIVITY switch.	Set at various settings.	Selectivity varies in steps: position 1, least selective; position 5, most selective.	Refer to ch. 5.
	10	Noise limiter-avc switch.	Set at various settings.	NL positions provide noise limiting; AVC positions provide constant output.	Refer to ch. 5.
	11	RF GAIN control.	Vary position of control. (Noise limiter-avc switch set at MAN.)	Output varies as control is varied.	Refer to ch. 5.
	12	AF GAIN control.	Vary position of control.	Output varies as control is varied.	Refer to ch. 5.

	Item No.	Item	Action or condition	Normal indications	Corrective measures
EQUIPMENT PERFORMANCE	13	TUNING CONTROL.	Rotate TUNING CONTROL.	Control moves freely in either direction.	Loosen tuning lock.
			Tune to station frequency.	Signal is heard.	Refer to ch. 5.
	14	NOISE LIMITER control.	Rotate control. (Noise limiter—avc switch set at AVC NL or MAN NL.)	Noise interference varies.	Do.
	15	HF TONE control.	Rotate control.	Tone of output signal varies.	Do.
	16	BFO ADJ control.	With power-transmit-receive switch set at REC CW position, tune in a c-w signal and vary control.	Tone of signal varies.	Do.
	17	Tuning lock.	Tighten lock under conditions of vibration.	Receiver remains tuned to frequency.	Check tightness of lock.
	18	Headset and loudspeaker.	Headset jack in first (halfway in) position.	Output from both headset and loudspeaker.	Check headset cording, jack, and plug, including position.
			Headset jack in second (fully in) position.	Output from headset only.	Check same as above.
			Flex headset and loudspeaker cords throughout entire length.	No change in output.	Replace cords.
	19	Vacuum tubes.	Noticeable decrease in sensitivity.	High sensitivity.	Remove, check, and replace faulty or weak tubes.
STOP	20	AF GAIN control.	Rotate fully counterclockwise.	No signal output.	Refer to ch. 5.
	21	Power-transmit-receive switch.	Set to fully counterclockwise position (OFF).	Dial lamps go out.	Do.

CHAPTER 4
THEORY

33. Block Diagram of Radio Receiver R-320/FRC (fig. 13)

a. Radio Receiver R-320/FRC is a 14-tube superheterodyne receiver covering a frequency range of 535 to 32,000 kc in six bands and may be used for reception of a-m or c-w signals in this frequency range. The equipment may be operated from a 50- to 60-cycle, 110- to 240-volt, a-c source.

b. The operation of the receiver is best explained with the use of the block diagram shown in figure 13. The signal picked up by the antenna is fed to a two-stage r-f amplifier, V-101 and V-102. These two stages have three tuned circuits to provide gain as well as good image frequency rejection. After being amplified by V-102, the second r-f amplifier, the signal is fed to the mixer stage, V-104, where it is combined with the output of the h-f oscillator, V-103. The output of the mixer stage is tuned to 455 kc, which is the i. f. used by this equipment.

c. This i-f output is fed to a three-stage i-f amplifier (V-105, V-106, and V-107) either directly or through a crystal filter network. For the first two settings of the SELECTIVITY switch, the signal is coupled directly; for the last three settings, the signal is fed through the crystal filter. The coupling system provides for five degrees of selectivity, giving reception ranging from broad band pass (high fidelity) to extremely sharp tuning for c-w reception. The three-stage i-f amplifier is designed with 12 tuned circuits to provide a high degree of selectivity. For purposes of c-w reception, the output of the bfo (V-112) is added to the circuit at the third i-f stage.

d. From the third i-f stage the signal is fed to the detector and avc diode, V-108, and to the noise limiter, V-109. Signal reception with or without the use of the noise limiter or automatic volume control is possible by the use of a selector switch on the front panel. The detector output is amplified by two a-f stages, V-110 and V-111, in cascade. The output of V-111 is fed to the final output terminals at the rear of the chassis, where two output impedances are available, or to the jack marked PHONES on the front panel.

e. A duo-diode rectifier tube, V-114, is used to provide full-wave rectified power for the equipment. A voltage regulator tube, V-113, is placed across a portion of the rectifier output to insure a constant potential for those circuits that require a regulated voltage supply.

34. Circuit Analysis

In the following paragraphs an analysis of each stage is given. For simplicity, consideration is given only to the circuit configuration obtained with RANGE switch S-101 and SELECTIVITY switch S-102 both in position 1. Paragraphs 39 and 43 cover the circuit changes produced by varying the position of these switches. The complete schematic of the radio receiver is shown in figure 44.

35. First R-f Amplifier Stage V-101 (fig. 14)

a. With RANGE switch S-101 in position 1 (band 1) the output of the antenna is fed to the junction of transformer T-101 and coil L-101. For this band the receiver is designed for the ordinary single-wire antenna system. On all other bands the input circuit is also designed for a 200-ohm transmission line (par. 39). Coil L-101 in series with capacitor C-112 form a series wavetrap resonant to the intermediate frequency. This wavetrap circuit (used only in band 1 operation) is provided to aid in the rejection of signals at the intermediate frequency.

b. The input signal appears across the primary of r-f input transformer T-101. Capacitors C-103A and C-103B are sections of the TUNING CONTROL capacitor which are connected across the secondary of transformer T-101 on band 1. These capacitors tune the secondary of T-101 to the desired frequency. ANT ADJ capacitor C-102 serves as a trimmer capacitor enabling alinement to the proper point on the h-f end of the calibrated main tuning dial.

c. Signal voltage across the tuned resonant circuit is coupled to the grid of the first r-f ampli-

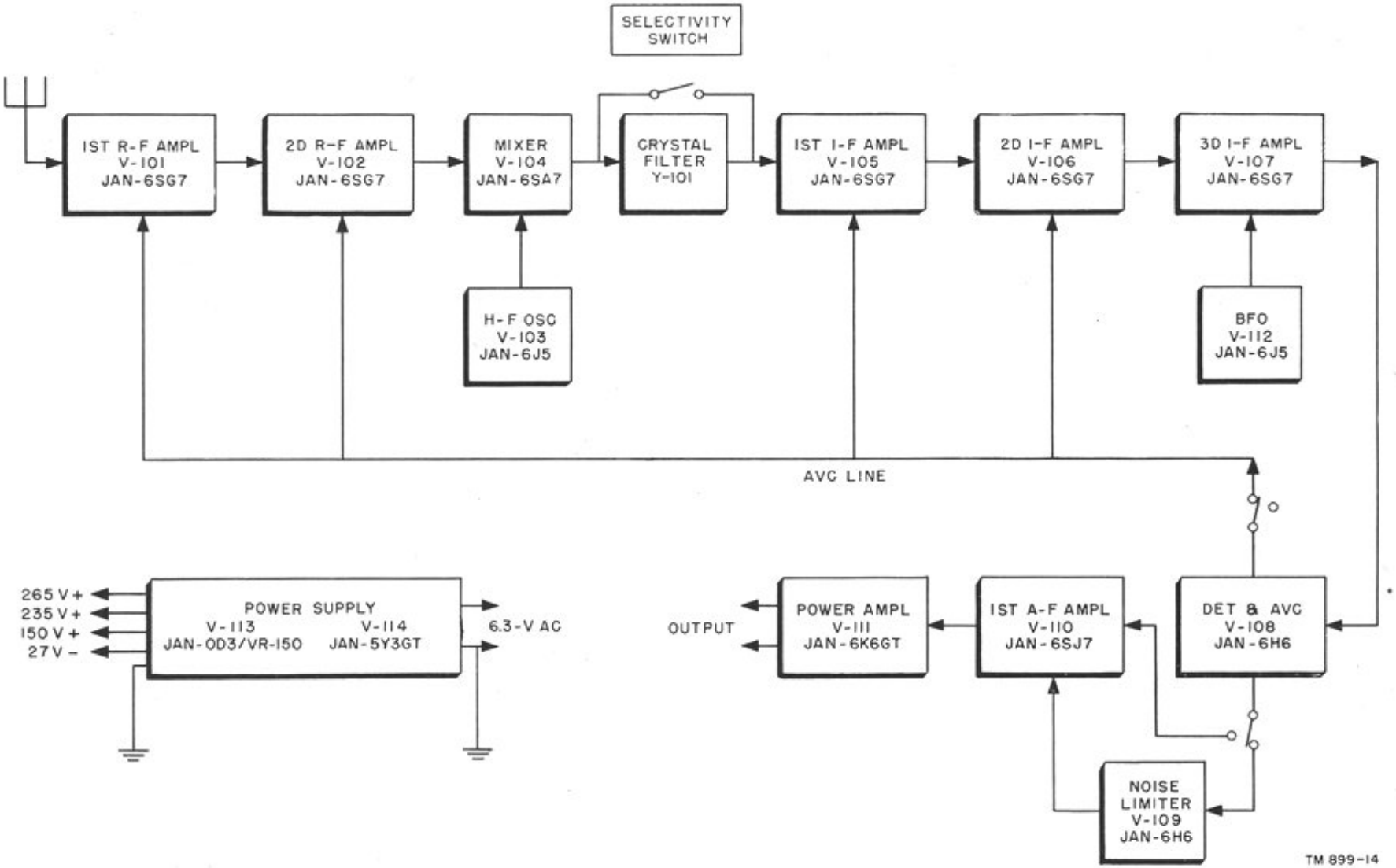

Figure 13. Radio Receiver R-320/FRC, block diagram.

fier tube, V–101, by capacitor C–104. Bias voltage (in the form of an avc voltage) is applied to the grid of V–101 through resistors R–110 and R–102. Filtering for the avc signal, developed in tube V–108, is provided by the filter comprised of C–122A, R–110, and C–121. The d-c (direct-current) voltage is blocked from the tank circuit by capacitor C–104.

d. Both screen and plate voltages are supplied through resistor R–104. Capacitor C–111 and resistor R–104 serve as the plate decoupling circuit. Resistor R–103 is the screen dropping resistor, and capacitor C–101 bypasses the screen. Resistor R–101 is used in series with the plate load to eliminate parasitic oscillations.

e. The output is developed across the parallel circuit comprised of C–115 and the primary of coupling transformer T–107. Capacitor C–115 is placed across the primary of T–107 to partially resonate T–107 at the l-f (low-frequency) end of band 1 and thus equalize the gain over this band. At the l-f end of band 1 the reactance of the primary of transformer T–107 decreases considerably in comparison with its reactance at the h-f end of the band.

36. Second R-f Amplifier Stage V–102 (fig. 14)

Transformer T–107 is the interstage coupling transformer used to transfer the energy from the first r-f amplifier to the second. Sections C–103C and C–103D of the TUNING CONTROL capacitor tune the secondary of T–107 to the desired frequency. Capacitor C–116A is a trimmer. The signal is then coupled to the grid of tube V–102 by resistor R–108 (used to prevent parasitic oscillations) and capacitor C–114. This capacitor is used to keep the avc bias voltage out of the tuned circuit. Resistor R–106 is part of the d-c grid return. The output of this stage is developed across the primary of transformer T–110. Capacitor C–149 partially resonates the primary of T–110 at the low end of the band to equalize the gain of the stage. Energy is transferred to the mixer stage (V–104) by means of transformer

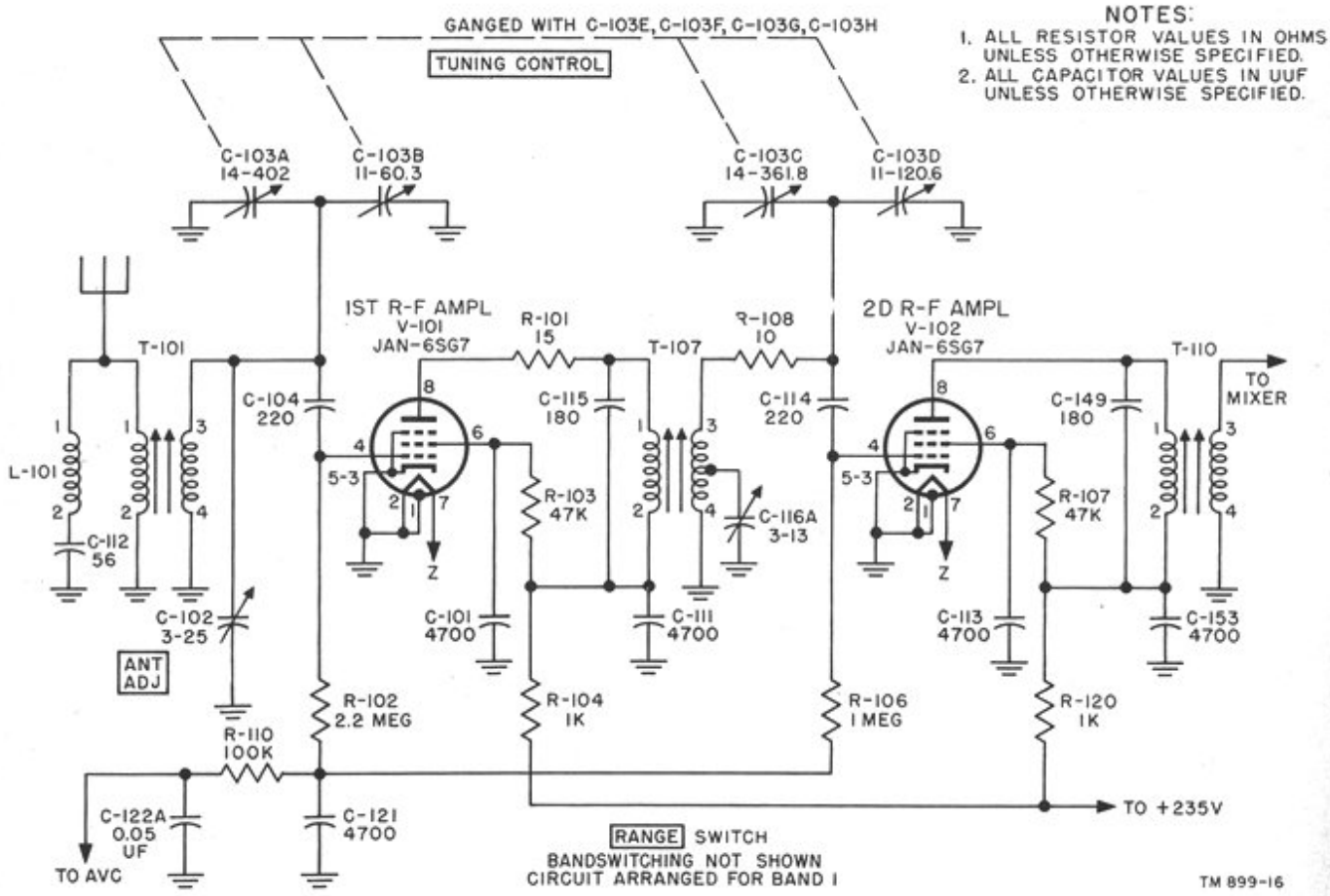

Figure 14. R-f amplifier stages, simplified schematic diagram.

T–110. Resistor R–107 and capacitor C–113 are the screen dropping resistor and bypass capacitor, respectively. Resistor R–120 and capacitor C–153 decouple the plate circuit for rf.

37. H-f Oscillator Stage V–103 (fig. 15)

a. Tube JAN–6J5, V–103, is used as the h-f oscillator. The output of this stage is heterodyned with the output of the second r-f amplifier to obtain the intermediate frequency (par. 38).

b. A modified Hartley oscillator is used to generate the signal to be mixed with the r-f signal in the mixer stage. By means of sections C–103E and C–103F of the TUNING CONTROL capacitor, the oscillator frequency is tuned to 455 kc above the radio frequency across the frequency range of band 1. L–105 is the tank coil. Capacitor C–126A is a trimmer for adjusting the frequency of the oscillator.

c. Capacitors C–125 and C–126A, which have negative temperature coefficients, and capacitor C–192 in parallel with C–128 are placed across the tank circuit of the oscillator. Capacitors C–125 and C–126A are used to compensate for frequency variations due to temperature changes, and the combination of C–192 and C–128 serves as a padder to reduce the total ganged tuning capacity of the oscillator.

d. Grid bias is developed across resistor R–111. Capacitors C–123 and C–124 block dc from the tank circuit. The output of the oscillator stage is coupled by capacitor C–142 to the mixer stage. Plate voltage is supplied to the oscillator tube from the 150-volt regulated supply, R–112 acts as the plate load resistor, and R–113 in conjunction with capacitors C–139 and C–140 serves as the plate decoupling network.

38. Mixer Stage V–104 (fig. 15)

a. The mixer stage is used to heterodyne the signals from the second r-f amplifier, V–102, and the h-f oscillator, V–103. A Tube JAN–6SA7 pentagrid converter, V–104, is used as the mixer in this equipment.

b. The output of the h-f oscillator stage, which is 455 kc above the incoming r-f signal, is injected on the first grid (pin 5) of V–104. Resistor R–115 is the grid return. The r-f signal from the second r-f amplifier is coupled to the mixer stage by, transformer T–110. Sections C–103G and C–103H of the TUNING CONTROL capacitor tune the secondary of T–110 to the incoming r-f signal. Capacitor C–150A is provided as a trimmer capacitor, and resistor R–118 is used to prevent parasitic oscillations. The r-f signal is introduced on the third grid (pin 8) of the mixer tube.

c. Resistor R–114, bypassed by capacitor C–141 provides self-bias for the mixer tube. Plate voltage is supplied to the mixer through resistor R–117 (which, together with capacitor C–144B, forms the plate decoupling network) in series with the plate circuit loading resistor, R–116. Screen voltage is supplied to V–104 through screen dropping resistor R–165. C–143 is the screen bypass capacitor, and capacitor C–157A provides decoupling.

d. The tube electron stream is modulated independently by the r-f and oscillator signals. The output of the mixer stage contains, in addition to the r-f signal and the signal from the h-f oscillator stage, the sum and difference of these two frequencies. A tuned circuit, resonant to the intermediate frequency of 455 kc (the difference frequency), is formed by the parallel combination of capacitor C–145 and the primary of transformer T–113. Resistor R–116 lowers the Q of the tuned circuit and thereby broadens the frequency response. Transformer T–113 couples the signal to the crystal bridge circuit and the first i-f amplifier (par. 40).

39. Band Switching of R-f Amplifier, Mixer, and H-f Oscillator Stages (fig. 44)

Paragraphs 35 through 38 describe the r-f amplifier, mixer, and h-f oscillator stages for band 1 operation. Switching of circuit components in these stages for operation on each of the 6 bands used is effected by the 16-section RANGE switch S–101A, front and rear, through S–101H, front and rear (fig. 44).

a. Separate antenna coils (T–101 through T–106) are used on each band to couple the antenna to the first r-f stage.

(1) The primary of each of these coils is connected to the antenna (terminal A on E–101) and ground (through center terminal of E–101) by switches S–101H rear and S–101H front. (The coil for band 1, T–101, is grounded directly.) For use with a straight-wire antenna, the center terminal of E–101 is grounded by means of a link to terminal G. For use with a balanced-line input this link is removed so that the center terminal is grounded through 1-megohm resistor R–105. All antenna coil secondaries,

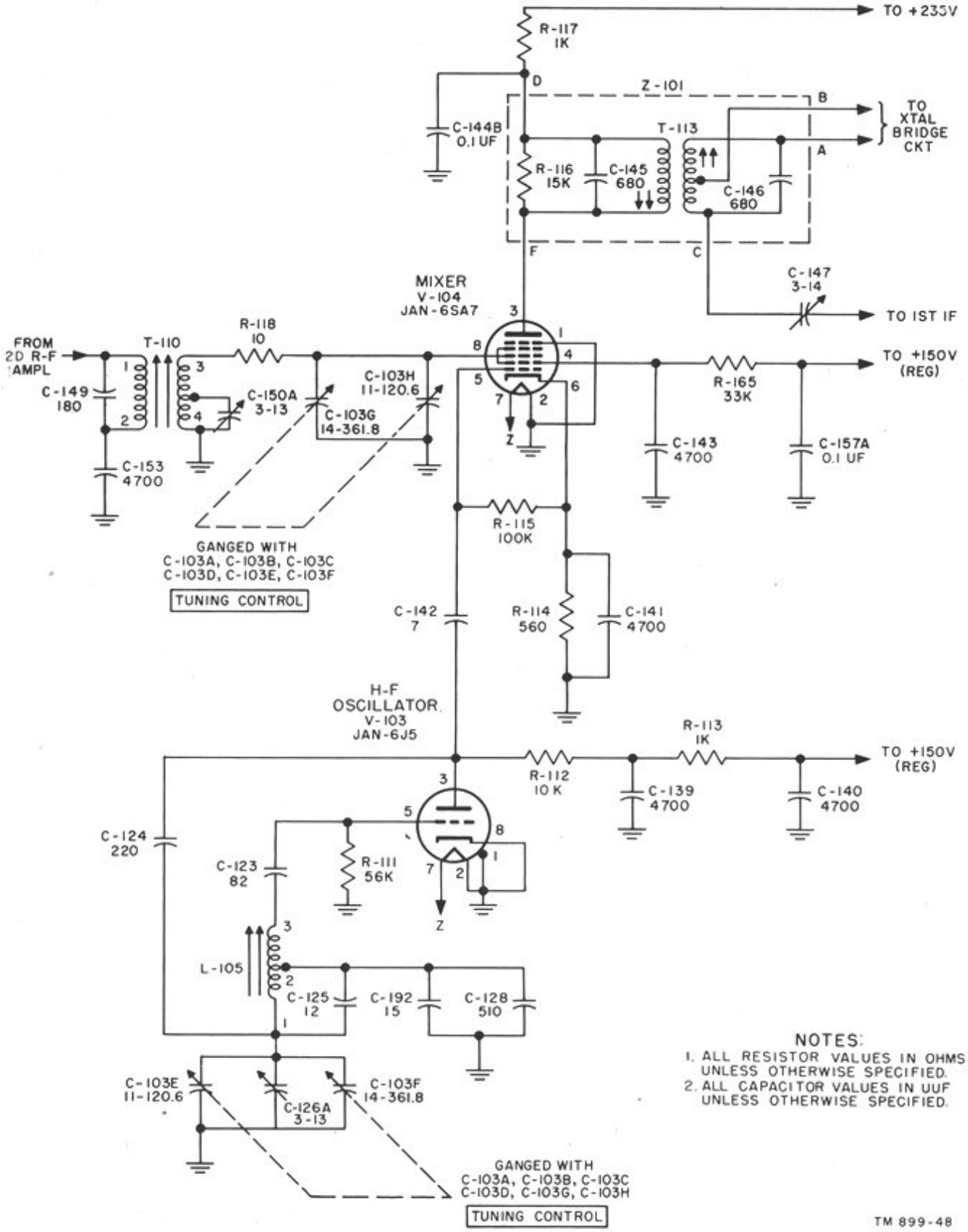

Figure 15. H-f oscillator and mixer stages, simplified schematic diagram.

when not used, are shorted to ground by switch S–101G rear, to prevent dead spots in the tuning range. On band 1 only, a wavetrap for rejecting the intermediate frequency (455 kc) is provided in the input circuit. It is comprised of coil L–101 and capacitor C–112.

(2) The secondary of each antenna coil is connected selectively to the grid of V–101 by switch S–101G front. This switch also connects different portions of ganged tuning capacitor C–103 into the circuit. Tuning capacitors C–103A and C–103B are used on bands 1 and 2, but only C–103A is used on band 3 and only C–103B is used on bands 4, 5, and 6. Trimmer capacitor C–102 is connected on all bands. The secondaries of antenna coils T–103 through T–106 are shunted in addition by capacitors C–106, C–108, C–109, and C–110, respectively, to obtain the desired frequency coverage in bands 3 through 6.

b. Coupling between the first and second r-f amplifier stages is inductive on bands 1, 2, and 3 and capacitive on bands 4, 5, and 6.

(1) Switch S–101F rear couples the first r-f amplifier to the primary windings of T–107, T–108, and T–109 on bands 1, 2, and 3, respectively. Switch S–101F front shorts the primaries of the two transformers not used in each of positions 1, 2, and 3.

(2) In positions 4, 5, and 6 the plate of V–101 is capacitively coupled to the tuned grid of V–102 by switch S–101F rear, and the plate coil of T–109 acts as an r-f choke to prevent C–111 from providing an r-f shunt to ground. Switch S–101F front shorts only the primaries of transformers T–107 and T–108 on these bands. Coupling is through capacitors C–107, C–105, and C–114 on bands 4 and 5, but on band 6 capacitor C–107 is not in the circuit.

(3) Switching of the grid input circuits for V–102 is done by switch S–101E front; switch S–101E rear shorts to ground the tuned circuits not used for each band. Capacitors C–116A, C–117A, and C–117C are variable trimmers for the tuned secondaries of transformers T–107, T–108, and T–109, respectively. Capacitors C–117B, C–116B, and C–116C are variable trimmers, and C–118, C–119, and C–120 are fixed trimmers, for tuned grid coils L–102, L–103, and L–104, respectively. Tuning capacitors C–103C and C–103D are switched in by S–101E front on bands 1 and 2. Band 3 uses tuning capacitor C–103C only, and bands 4, 5, and 6 use C–103D only.

c. Coupling between the second r-f stage and the mixer is almost identical to that between the first and second r-f stages. As is evident from the schematic diagram, switches S–101D rear and front and S–101C rear and front have the same functions as switches S–101F rear and front and S–101E rear and front, respectively.

(1) Switch S–101D rear couples the circuit through the coils of T–110, T–111, and T–112 on bands 1, 2, and 3, respectively. Switch S–101D front shorts the primary of the two transformers not used in each of positions 1, 2, and 3.

(2) In positions 4, 5, and 6 the plate of V–102 is capacitively coupled to the tuned grid of V–103 by switch S–101D rear, and the plate coil of T–112 acts as an r-f choke that prevents C–153 from providing an r-f shunt to ground. Switch S–101D front shorts only the primaries of transformers T–110 and T–111 on these bands. Coupling is through capacitors C–152 and C–148 on band 4; on bands 5 and 6 the coupling is through capacitor C–148 only.

(3) Switching of the grid input circuits for V–104 is effected by switch S–101C front; switch S–101C rear shorts to ground the tuned circuits not used for each band. Capacitors C–150A, C–151A, and C–151B are variable trimmers for the tuned secondaries of transformers T–110, T–111, and T–112, respectively. Capacitors C–151C, C–150B, and C–150C are variable trimmers, and C–154, C–155, and C–156 are fixed trimmers, for tuned grid coils L–111, L–112, and L–113, respectively. Tuning capacitors C–103G and C–103H are switched in by S–101C front on bands 1 and 2. Band 3 uses tuning capacitor C–103G only, and bands 4, 5, and 6 use C–103H only.

d. Band switching of the h-f oscillator is effected

by switches S–101A rear and front and S–101B rear and front.

(1) The grid of oscillator V–103 is connected (through C–123) to coils L–105 through L–110, in turn, on bands 1 through 6, respectively, by switch S–101A rear. On bands 1, 2, and 3 switch S–101A shorts the two coils not used (of coils L–105, L–106, and L–107) for each of the three positions.

(2) The plate of oscillator V–103 is connected (through C–124) to coils L–105 through L–110, in turn, on bands 1 through 6 respectively, by switch S–101B front. Switch S–101B front also connects tuning capacitor C–103E and C–103F on bands 1 and 2. On band 3 only C–103F is connected, and on bands 4, 5, and 6 only C–103E is connected. Switch S–101B rear shorts coils L–108 and L–109 to ground in position 1, shorts L–105 and L–109 in position 2, shorts L–105 and L–106 in position 3, shorts L–105, L–106, and L–107 in position 4, shorts L–105, L–106, L–107, and L–108 in position 5, and shorts all but L–110 in position 6. Capacitors C–129 and C–127A in position 2, C–131 and C–127B in position 3, C–127C and C–134 in position 4, C–126B and C–136 in position 5, and C–126C and C–138 in position 6 are used to compensate for frequency variations due to temperature changes.

40. Crystal Filter and First I-f Amplifier Stage V–105 (fig. 16)

a. The output of the mixer stage is coupled directly to the first i-f amplifier tube, V–105, by transformer T–113 when SELECTIVITY switch S–102 is in position 1 or 2. In either position the crystal is shorted out. With S–102 in position 3, 4, or 5, the output of the mixer stage is coupled to the first i-f amplifier through crystal Y–101 and network Z–102.

b. In position 3 of S–102 the secondary of transformer T–113 in conjunction with capacitor C–146 forms a tank circuit resonant at 455 kc, and crystal Y–101 acts as a series resonant circuit tuned to the intermediate frequency. The output of the series resonant circuit (Y–101) is applied to the grid of the first i-f amplifier tube, V–105, and also is fed into another parallel resonant circuit comprised of L–114 and C–162. This entire crystal filter network (the two parallel resonant circuits and the crystal) forms a band-pass filter, with the tuned circuits in Z–101 and Z–102 being parallel resonant to 455 kc and with Y–101 being series resonant to that frequency. The parallel circuits offer a high impedance to the intermediate frequency and pass to ground frequencies on either side of 455 kc, and the crystal, acting as a series resonant circuit, offers a high impedance to frequencies above and below 455 kc. Since each of the two parallel resonant circuits is the equivalent of a high resistance in series with the equivalent series-resonant circuit of the crystal, the Q and therefore the selectivity of the series-resonant crystal filter circuit is reduced, and the bandwidth is several kilocycles wider than that of the crystal alone.

c. In addition to acting as a series-resonant circuit, the crystal, in conjunction with the capacity provided by the crystal holder, forms a parallel resonant circuit. The resonant frequency of this circuit can be varied from slightly below to slightly above 455 kc by means of CRYSTAL PHASING control C–147. This control varies the net reactance across the crystal. Since the parallel resonant circuit is in series with the signal passing through the filter, a maximum impedance can be offered to some frequency other than, but close to, 455 kc. This permits the rejection of an interfering signal close to the desired signal.

d. In position 4 of S–102 connection to filter Z–102 is through a tap on coil L–114. By the addition of trimmer capacitor C–164B, the resonant frequency of the filter network contained in Z–102 is held constant in spite of the change in inductance. However, by using only a portion of coil L–114, the Q and the effective resistance of the tuned circuit of Z–102 is decreased. Therefore the total resistance in series with the crystal is reduced. As a result the Q, and therefore the selectivity, of the crystal filter circuit is increased.

e. In position 5 of S–102 the Z–102 filter network utilizes an even smaller portion of coil L–114. The resonant frequency is again maintained at 455 kc by the addition of trimmer capacitor C–164A. This results in a further reduction of the effective resistance of the tuned circuit of Z–102. The Q of the crystal filter circuit is correspondingly increased, and hence results in even more selective operation than that obtained in position 4 of SELECTIVITY switch S–102. The selectivity of the crystal filter circuit approaches the selectivity of the crystal alone.

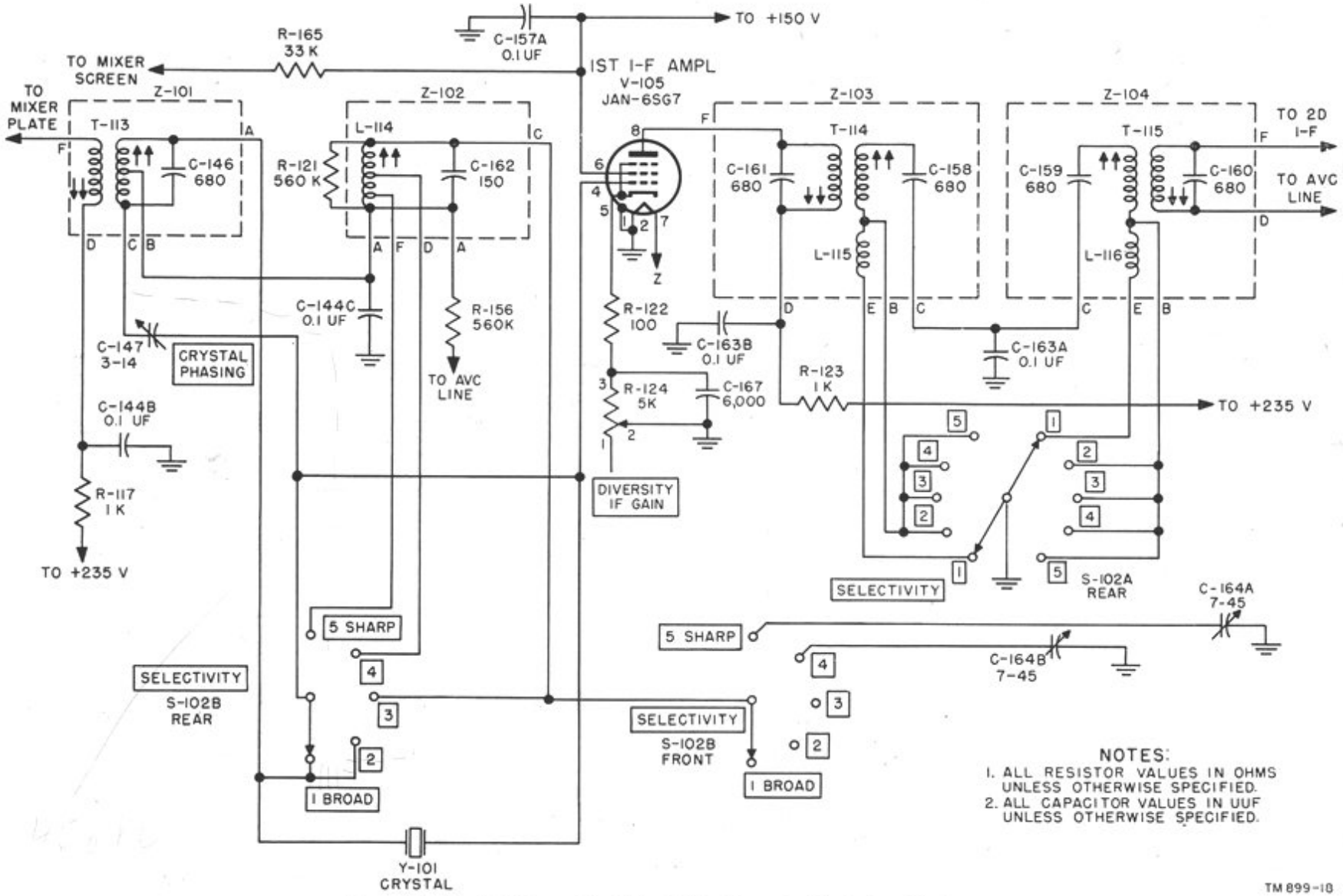

Figure 16. Crystal filter and first i-f amplifier stage, simplified schematic diagram.

f. Resistor R–121 is placed across the filter network contained in Z–102 to lower the Q and hence broaden the response of the filter. This is necessary to prevent the circuit from becoming too selective.

g. The first i-f amplifier tube, V–105, is provided with cathode bias by biasing resistors R–122 and R–124. Resistor R–124, the DIVERSITY IF GAIN rheostat, controls the sensitivity of the receiver by varying the amplification of this stage. Since an a-f gain control potentiometer (R–142) is provided in this equipment, the prime purpose of R–124 is in an installation where two or more of these receivers are used in diversity reception and the a-f stages are not used. Cathode bypass is provided by capacitor C–167. Avc voltage is applied to the grid of V–105 through resistor R–156 znd coil L–114, on bands 3, 4, and 5 and through R–156 and T–113 on bands 1 and 2. R–156 and C–144C decouple the grid of V–105 from the avc circuit.

h. The output of the first i-f stage is developed across the tuned circuit consisting of capacitor C–161 and the primary of transformer T–114. Plate voltage is applied to V–105 through resistor R–123 and the primary of transformer T–114. Plate decoupling is provided by resistor R–123 and capacitor C–163B.

i. The secondary of transformer T–114, in series with coil L–115, is tuned by the series-connected capacitors C–158 and C–163A (SELECTIVITY switch in position 1). Capacitor C–163A is also in series with capacitor C–159 across the primary of coupling transformer T–115 and coil L–116. Capacitor C–163A acts as a mutual coupling device (in place of the more commonly used inductive coupling) between the two tuned circuits, and its value is chosen to provide some degree of overcoupling. (Refer to the curves of figure 40 for the combined response of T–114 and T–115.) The center frequency is the 455-kc intermediate frequency. Output is coupled to the second i-f stage by the secondary of transformer T–115.

j. When the SELECTIVITY switch is placed in position 2, 3, 4, or 5, coils L–115 and L–116 are short-circuited by the switch contacts. The slight change in inductance has no appreciable effect on the center frequency of the coupled circuits but does affect the mutual coupling so as to narrow the band pass and increase the gain (fig. 40).

41. Second I-f Amplifier Stage V–106 (fig. 17)

a. Input to the second i-f amplifier tube, V–106, is developed across the tuned circuit made up of the secondary of transformer T–115 and capacitor C–160. The DIVERSITY IF GAIN rheostat R–124 provides variable cathode bias for this stage. The grid is biased by the potential on the avc bus through resistor R–125 and the secondary of transformer T–115. R–125 and C–144A decouple the grid of V–106 from the avc circuit.

b. Plate voltage is supplied from the +235-volt line through resistor R–127, which, in conjunction with capacitor C–157B, prevents rf from entering the power supply. Screen voltage is obtained directly from the regulated 150-volt supply; capacitor C–157A bypasses the screen to ground. Output from the second i-f amplifier is developed across the parallel resonant circuit comprised of capacitor C–169 and the primary of transformer T–116. Two interstage tuned circuits are used here, as between the first and second i-f amplifiers, for added selectivity. When the SELECTIVITY switch is in position, the secondary of transformer T–116, coil L–117, and capacitors C–170 and C–157C form the first of the interstage tuned circuits; the primary of T–117, coil L–118, and capacitors C–171 and C–157C form the second interstage tuned circuit. Coils L–117 and L–118 are shorted out of the circuit to sharpen the band-pass characteristics when SELECTIVITY switch S–102 is in positions 2, 3, 4, and 5. (See figs. 36 through 40.)

c. The output of the bfo, V–112, is introduced at the junction of the two interstage tuned circuits mentioned above. This introduces a signal of 456 kc. approximately 1,000 cycles above the intermediate frequency, for c-w reception. Monitor jack J–101 is used in monitoring the receiver during diversity operation. It is mounted at the rear of the chassis and connected across the interstage coupling capacitor, C–157C.

42. Third I-f Amplifier Stage V–107 (fig. 17)

a. The second interstage circuit is inductively coupled to the tuned circuit consisting of the secondary of transformer T–117 and capacitor C–173. This tuned circuit is capacitively coupled to the grid of V–107, the third i-f amplifier tube. R–130 is the grid return. The output of the stage is developed across the tuned circuit comprised of

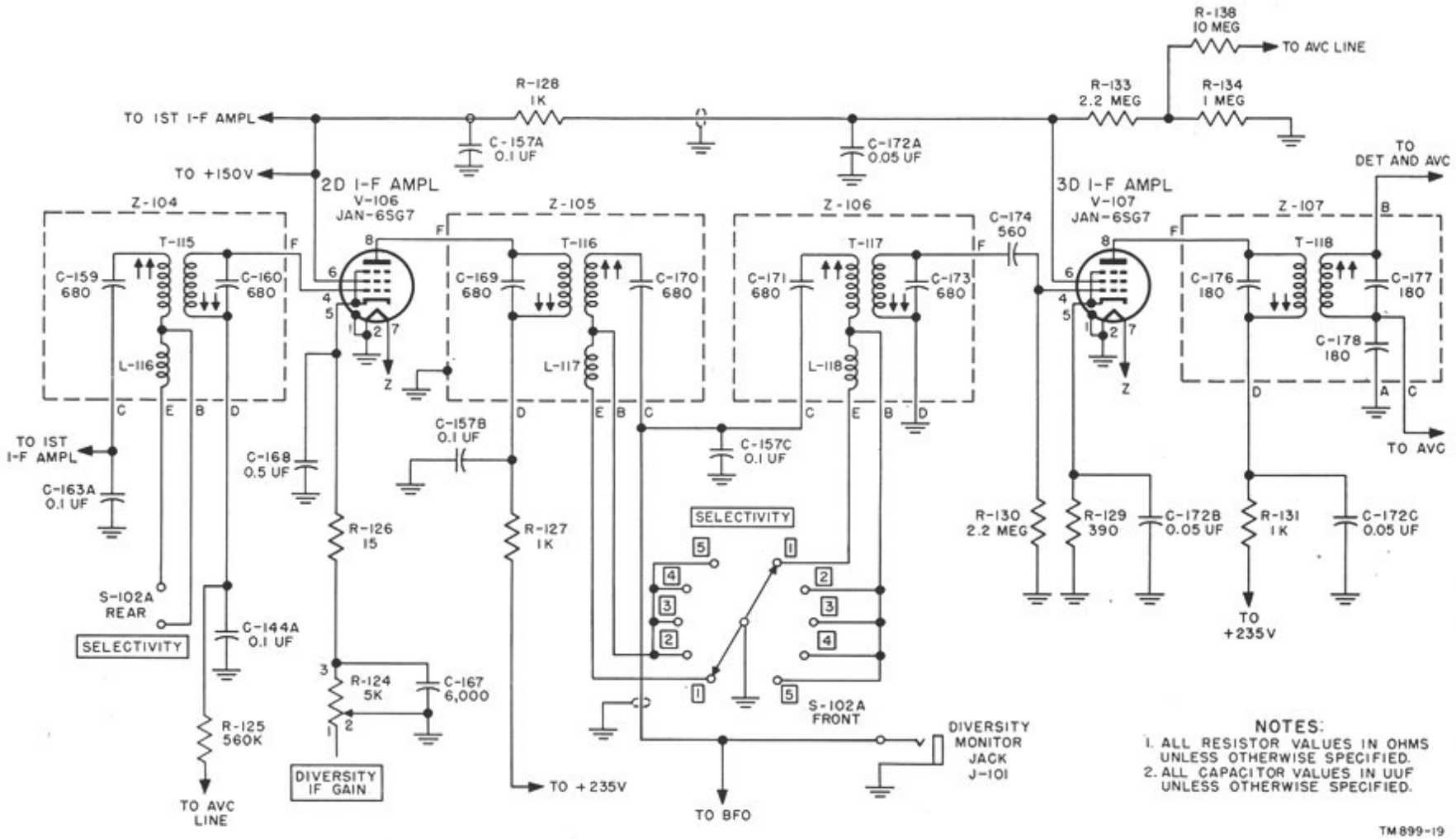

Figure 17. Second and third i-f amplifier stages, simplified schematic diagram.

capacitor C–176 and the primary of transformer T–118.

b. Plate voltage is supplied through decoupling resistor R–131, and the screen is fed through resistor R–128. The combination of resistor R–131 and capacitor C–172C provides plate decoupling. Capacitor C–172A serves as the screen bypass capacitor, and additional decoupling is provided by resistor R–128.

43. Selectivity Switching System (fig. 18)

a. The SELECTIVITY switch, S–102, is a four-wafer, five-position switch used in the i-f stages to vary the selectivity of the receiver.

b. With the SELECTIVITY switch in position 1, the i-f bandwidth obtained (outermost curve in fig. 18) is sufficiently broad for high fidelity reception. In this position, the two interstage coupling systems between the first and second i-f stages and between the second and third i-f stages are adjusted for broad bandwidth. This is done by connecting the E points of networks Z–103, Z–104, Z–105, and Z–106 to ground. Thus coils L–115, L–116, L–117, and L–118 are placed in the tuned circuits. This added inductance in 4 of the 12 tuned i-f circuits overcouples the circuits, thereby adjusting the i-f channel for a broad bandpass.

c. Position 2 is useful for normal voice or tone reception. With switch S–102 in this position, the B points of the networks mentioned above are tied to ground. This shorts the added coils out of the circuit, thereby decreasing the coupling, narrowing the bandpass, and yielding the sharpest i-f channel available without the use of crystal filtering.

d. Crystal Y–101, shorted out of the circuit when the SELECTIVITY switch is in positions 1 and 2, is used in conjunction with a bridge circuit and is connected to the first i-f amplifier when the switch is in positions 3, 4, and 5. Selectivity in these three positions is varied by changing the bandpass characteristics of the filter of which the crystal is a part. (See par. 40.) This is done by switching to different taps on coil L–114 and by switching capacitors C–164A and C–164B into or out of the circuit as required to maintain resonance.

e. In position 3 of S–102 the selectivity obtained is useful for the reception of very sharply modulated signals or for c-w signals. In general, it will be found that the selectivity provided when S–102 is in position 4 is most useful for the reception of c-w signals. Position 5 provides an extremely high degree of selectivity. It will be found desirable to use this mode of operation for reception of c-w signals during cases of extreme interference.

44. Detector and Automatic Volume Control Stages V–108A and V–108B (fig. 19)

a. The first half of duo-diode Tube JAN–6H6, V–108A, functions as the detector in this equipment. The input to this stage is developed across a tuned circuit comprised of the primary of transformer T–118 and capacitor C–176. The plate circuit of V–108A may be traced from ground, through the diode from cathode to plate, through the secondary winding of transformer T–118 to terminal 5 of terminal board E–102. When this equipment is not used in a diversity reception set-up, a jumper must be placed between terminals 4 and 5 of E–102. The plate circuit is then completed from terminal 4 through resistors R–135 and R–136 back to ground.

b. Diode V–108A functions as a half-wave rectifier with resistors R–135 and R–136 acting as load resistors. The load is bypassed by capacitor C–178, which acts as an r-f filter.

c. When the noise limiter-avc switch, S–103, is in the MAN or the AVC position, the audio signal developed across resistor R–136 is fed directly to the AF GAIN potentiometer, R–142, through coupling capacitor C–179 and thence to the grid of the first a-f amplifier tube, V–110, through coupling capacitor C–180 (fig. 44).

d. With switch S–103 is either MAN NL or AVC NL the detector output is fed to the noise-limiter circuit (V–109) before being introduced to the first a-f amplifier. See paragraph 45 for a discussion of the noise-limiter circuit.

e. A voltage divider consisting of RF GAIN potentiometer R–163 and resistor R–164 is connected between the −27-volt output of the power supply and ground. When switch S–103 is in the MAN or MAN NL position, the avc diode, V–108B, is shorted out of the circuit and the voltage tapped off potentiometer R–163 (between −27 volts and −2 volts) is placed on the avc bus. This permits manual control of the bias, and hence the gain, of the two r-f amplifiers and of the first and second i-f amplifiers.

f. In either of the positions which utilize avc (AVC and AVC NL) switch S–103 does not short V–108B out of the circuit. In this case the setting

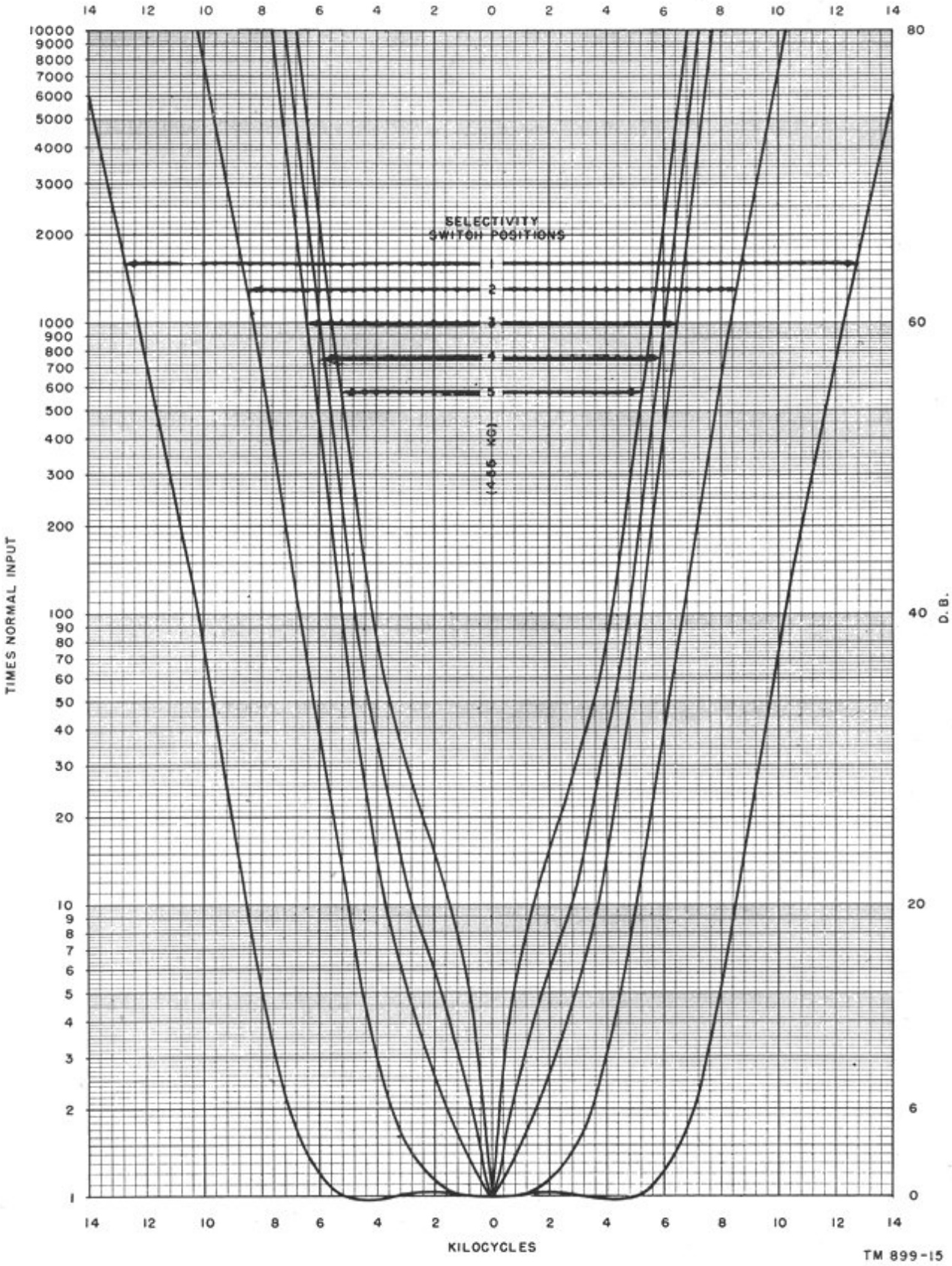

Figure 18. Selectivity curves for Raaio Receiver R-320/FRC.

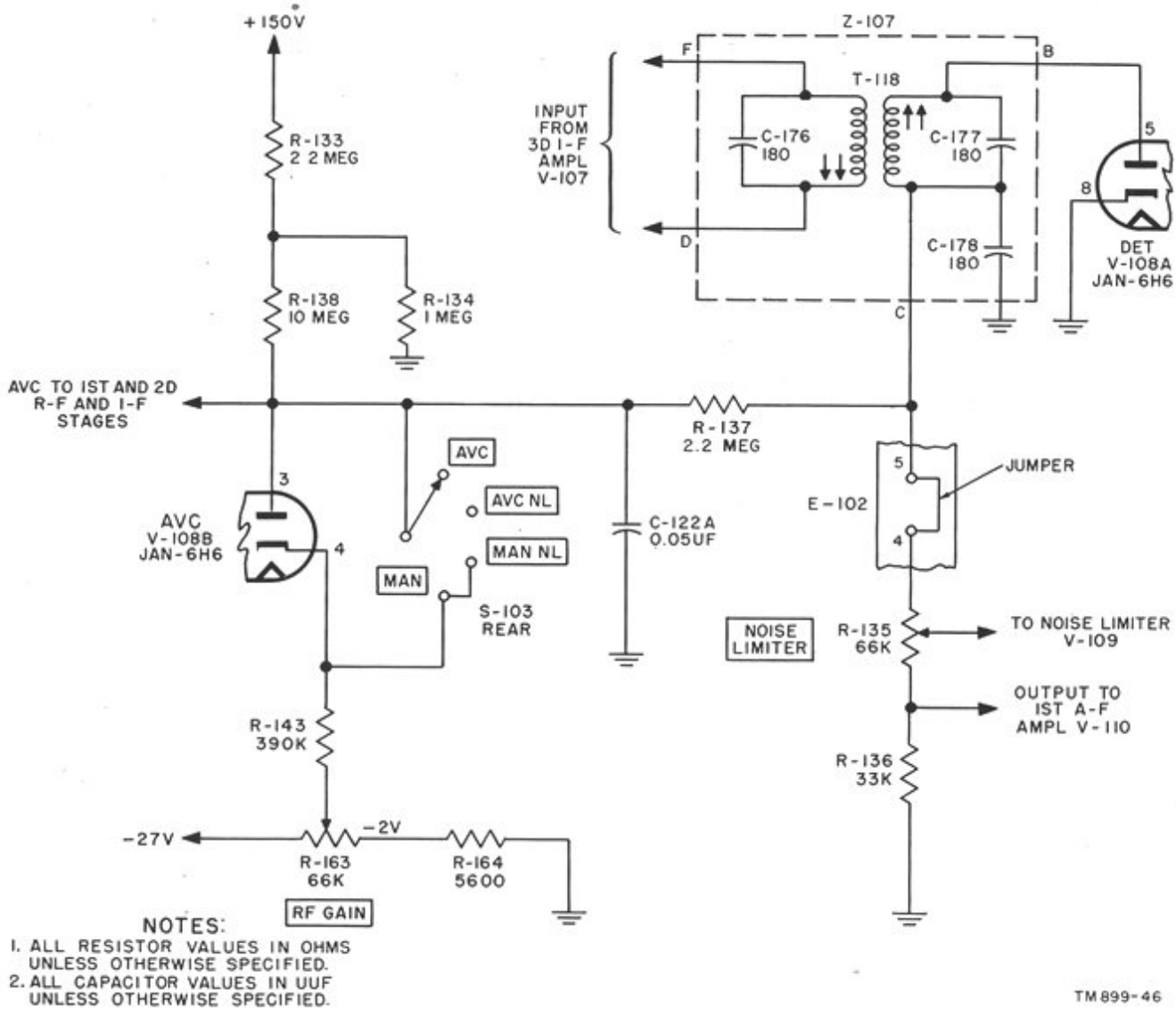

Figure 19. Detector and avc stages, simplified schematic diagram.

of the RF GAIN potentiometer fixes the cathode voltage and hence the operating level of V–108B. Another voltage-divider circuit consisting of resistors R–133 and R–134 places approximately +45 volts at the junction of the dividing circuit and dropping resistor R–138. This, in conjunction with the negative voltage tapped from the RF GAIN potentiometer, provides a delay voltage during avc operation.

g. The incoming i-f signal, developed across the secondary of transformer T–118, causes terminal 5 of terminal board E–102 to become negative with respect to ground. When this signal is weak, it will be insufficient to drive the plate of tube V–108B negative with respect to the cathode. The tube will continue to conduct much the same as if no signal were being developed across transformer T–118, and a more or less constant bias will be applied to the first and second r-f and i-f amplifier tubes. Tube current flowing through resistor R–138 will cause the plate end of this resistor to become negative with respect to ground but positive with respect to cathode. When the incoming signal is strong enough to drive the plate of V–108B negative with respect to the cathode, the tube will cease to conduct and the negative avc-bus voltage across capacitor C–122A will be proportional to the strength of the received signal, increasing the negative bias and reducing the gain of the first and second r-f and i-f amplifier tubes. The combination of resistor R–137 and capacitor C–122A forms a filter which smooths out the audio voltage used for avc.

45. Noise-limiter Stage V–109 (fig. 20)

a. The detector output appears across NOISE LIMITER potentiometer R–135 and resistor R–136. When switch S–103 is in either the AVC or MAN position, the signal across resistor R–136 is coupled by capacitor C–179 to the AF GAIN potentiometer, R–142. The signal from this potentiometer is coupled through capacitor C–180 to the grid of the first a-f amplifier, V–110 (par. 47). The receiver output level may be varied by varying R–142.

b. A noise limiter, V–109, is provided to permit optimum reception. It is placed in the circuit when S–103 is in the MAN NL or AVC NL position. Since the input signal is negative with respect to ground, the plate (pin 3) will normally be positive with respect to the cathode (pin 4) (fig. 20). The cathode connection is through resistors R–132 and R–141. As a result of this polarity relationship, this section of V–109 conducts and forms a path for the audio signal through the switch, capacitor C–179, and potentiometer R–142. Since noise is generally in the form of sharp peaks of high amplitude and very short duration, fairly effective noise limitation may be obtained by clipping these peaks. Since the waveshape of modulation peaks are similar, noise limiting will also result in some clipping of the intelligence. It is therefore necessary to compromise between the noise signals that will be tolerated and the distortion of the intelligence. Noise peaks momentarily build a high voltage across the load resistors, (R–135 and R–136), driving the plate (pin 3) more negative than it was before. Normally the cathode (pin 4) would likewise be driven more negative, and the tube would continue to conduct. As a result of the time constant of R–136, the tapped portion of R–135, and R–132 in conjunction with capacitors C–122B and C–122C, the cathode potential will tend to remain constant on noise signals of short duration. Thus, the plate momentarily goes more negative than the cathode, conduction in this section of the diode is stopped, the audio circuit is opened, and the receiver is silenced for the short period of the noise signal.

c. From the above discussion, it may be seen that the setting of NOISE LIMITER potentiometer R–135 determines the noise level that will be tolerated. By setting the variable arm close to tap 1, the voltage difference between plate and cathode (pins 3 and 4) of V–109 is made small. As a result, a comparatively small noise or signal peak will cause the tube to cut off. At the opposite extreme, setting the variable arm nearer to tap 3 will allow all but the highest

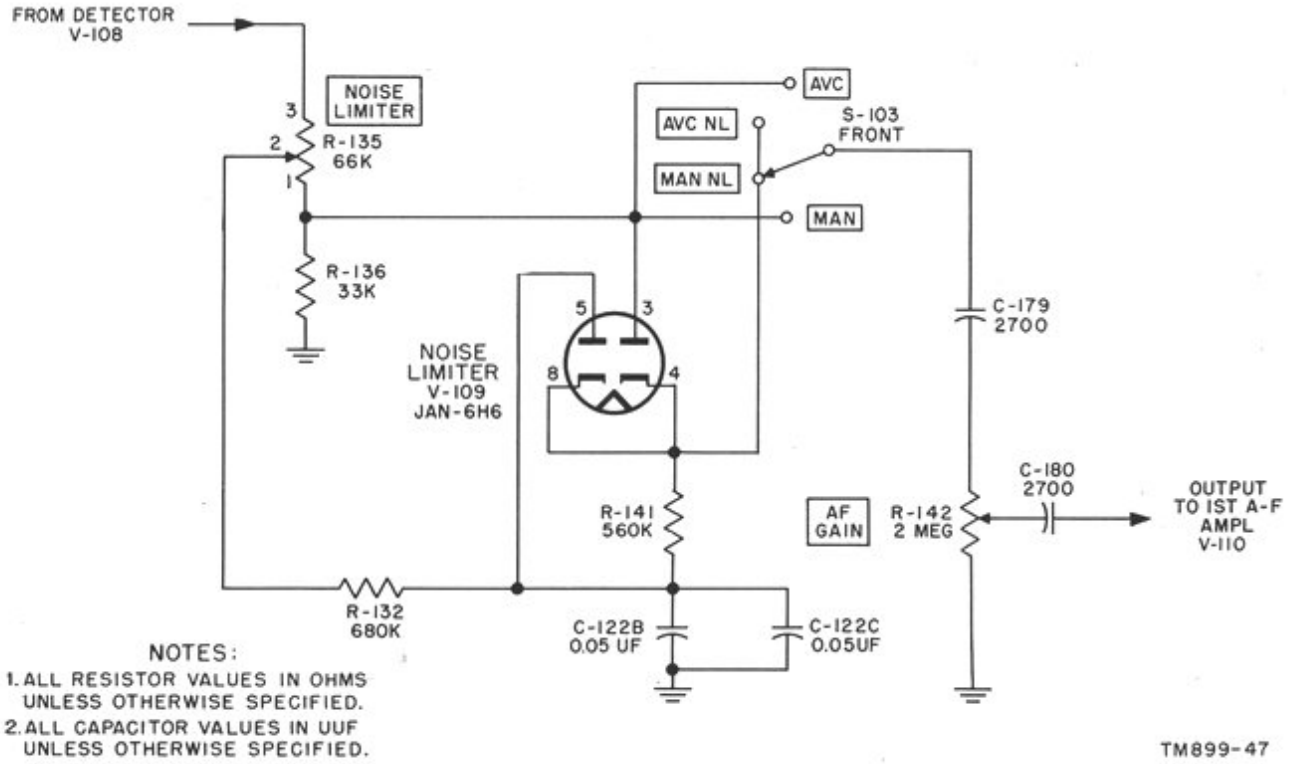

Figure 20. Noise-limiter stage, simplified schematic diagram.

amplitude noise peaks to pass. It is therefore necessary to select some intermediate setting of R–135 that will yield the most satisfactory compromise between fidelity and readability.

d. A second diode, pins 5 and 8 of tube V–109, is used to prevent the noise-limiting circuit itself from generating noise. When the signal diode (pins 3 and 4 of V–109) cuts off during the presence of short noise voltages, the current through R–141 and the potential at pin 4 of V–109 tends to decrease to zero. Such a change in potential would be coupled to the AF GAIN control and be audible as a noise pulse each time the signal diode stopped conducting. The second diode section (pins 5 and 8 of V–109) is connected across R–141 in such a way as to maintain a constant potential at pin 4 of V–109 and hence prevent the introduction of noise by the cutting-off of the signal diode. Normally (when no noise is present) there is no conduction between pins 8 and 5 of V–109, since the voltage developed across R–141 by signal current biases this section to cut-off. When conduction between pins 4 and 3 ceases, however, the contact potential of V–109 causes the tube to conduct and maintain the same voltage across R–141 as did the signal current. The potential at pin 4 of V–109 then remains unchanged during the time the limiter is effective.

e. To minimize the diode current due to contact potential, a 5-ohm resistor (comprised of the parallel combination of R–139 and R–140) is placed in series with the filament of the noise-limiter tube, V–109 (fig. 44). This lowers the heater voltage and causes the diode to draw very little current.

46. Beat-frequency Oscillator Stage V–112 (fig. 21)

The bfo tube, V–112, is a self-excited oscillator which produces a frequency differing by about 1,000 cps (cycles per second) from the intermediate frequency to produce an audible tone for c-w reception.

a. The oscillator is of the Hartley type. The tuned grid portion of the circuit consists of coil L–119 and the parallel combination of capacitors C–186 and C–188. Resistor R–154 is the plate load. Capacitors C–163C and C–187 are plate feedback and grid coupling capacitors, respectively. Resistor R–155 is the grid leak.

b. The operator can adjust the frequency of the oscillator by changing the setting of the slug in the permeability tuned coil, L–119, and also by means of trimmer capacitor C–188 (BFO ADJ control on front panel). For operation, the frequency of the oscillator is first adjusted to 455 kc by means of L–119, with the BFO ADJ control in midposition. Thereafter, the operator can vary the oscillator frequency with the BFO ADJ control to change the audio beat note.

c. The regulated 150-volt d-c supply is used to stabilize the performance of the oscillator. Input is through switch S–104A rear.

d. The oscillator output is coupled from the cathode of the tube to the secondary of the second i-f transformer, T–116, through capacitor C–175.

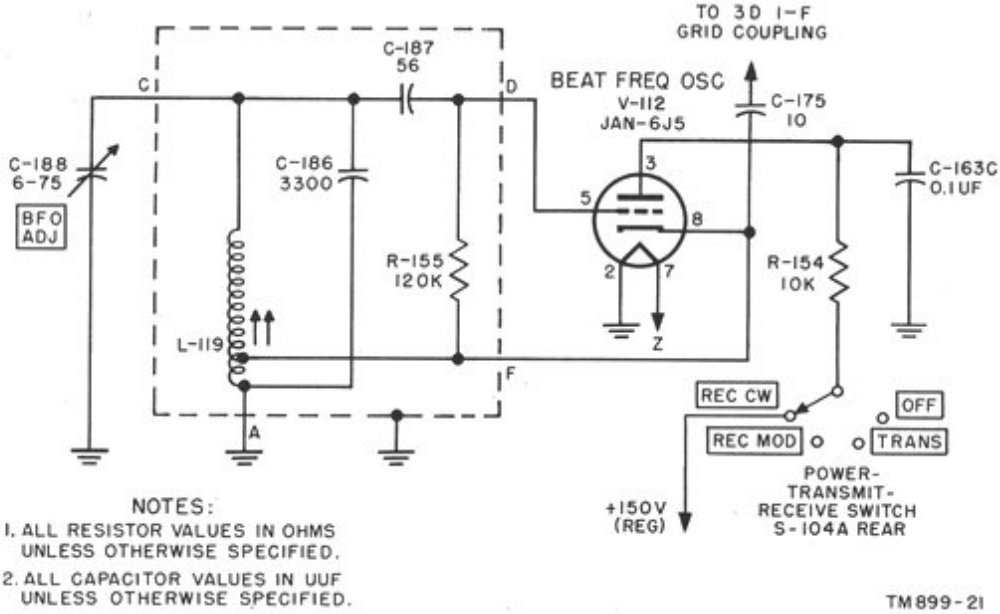

Figure 21. Beat-frequency oscillator stage, simplified schematic diagram.

47. First A-f Stage V–110 and Power Amplifier Stage V–111 (fig. 22)

Tube JAN–6SJ7 (V–110) and Tube JAN–6K6GT (V–111) serve as the first a-f and power amplifiers of the receiver.

a. The audio signal from the detector is fed to the grid of the first a-f stage (V–110) through blocking capacitor C–179, AF GAIN control R–142, and blocking capacitor C–180. The AF GAIN control is used to vary the strength of the signal fed to the first a-f amplifier. Both fixed bias and cathode bias are used for tube V–110. The fixed bias is tapped from between resistors R–161 and R–162 in the voltage divider formed by these resistors and R–160. The cathode bias is developed across resistor R–150. Resistors R–152, R–153, and R–162 are the grid return resistors, and resistor R–153 and capacitor C–185C act as a grid decoupling circuit. Resistor R–151 is the screen dropping resistor, and capacitor C–185A is the screen bypass capacitor. The output of the first amplifier is developed across plate load resistor R–148. Capacitor C–185B and resistor R–149 form a plate decoupling circuit. Capacitor C–184 and HF TONE control R–144 serve as a tone control for the amplifier. Inverse feedback from tap 6 of output transformer T–119 is applied to the unbypassed cathode of the first a-f amplifier through resistor R–146 to cancel objectionable harmonic distortion.

b. The output of the first a-f amplifier is fed to the grid of the output stage, V–111, through d-c blocking capacitors C–182 and C–183. Fixed bias only is applied to the grid and is tapped from the junction of resistors R–160 and R–161. Resistors R–145, R–161, and R–162 are the grid return resistors. Screen voltage, bypassed by capacitor C–189, is obtained directly from the 235-volt supply. A 265-volt potential is supplied to the plate through the primary of transformer T–119. The output of the amplifier is developed across the primary of transformer T–119. Capacitor C–181 shunts the primary to bypass undesirable high frequencies. Transformer T–119 has two secondaries; one for headset and/or speaker connection and the other for 600-ohm line connection.

c. The 600-ohm secondary of T–119 is connected to terminals 1 and 2 on E–103 (fig. 44). Terminals 6 and 7 of the other secondary winding connect to contacts D and B, respectively, of PHONES jack J–102; terminal 5 of this same winding is grounded. If no headset is plugged into J–102, or if a headset is plugged into the first position (par. 13), terminal 6 of T–119 is connected through contacts C, D, and A of J–102 to terminal 1 of E–102. A speaker connected between terminals 1 and 2 (ground) of E–102 will then be bridged across winding 6–5 of T–119. If a headset is plugged into the second position of J–102, the circuit to E–102 is opened at contacts C and D of J–102 and resistor R–147 is connected in parallel with winding of

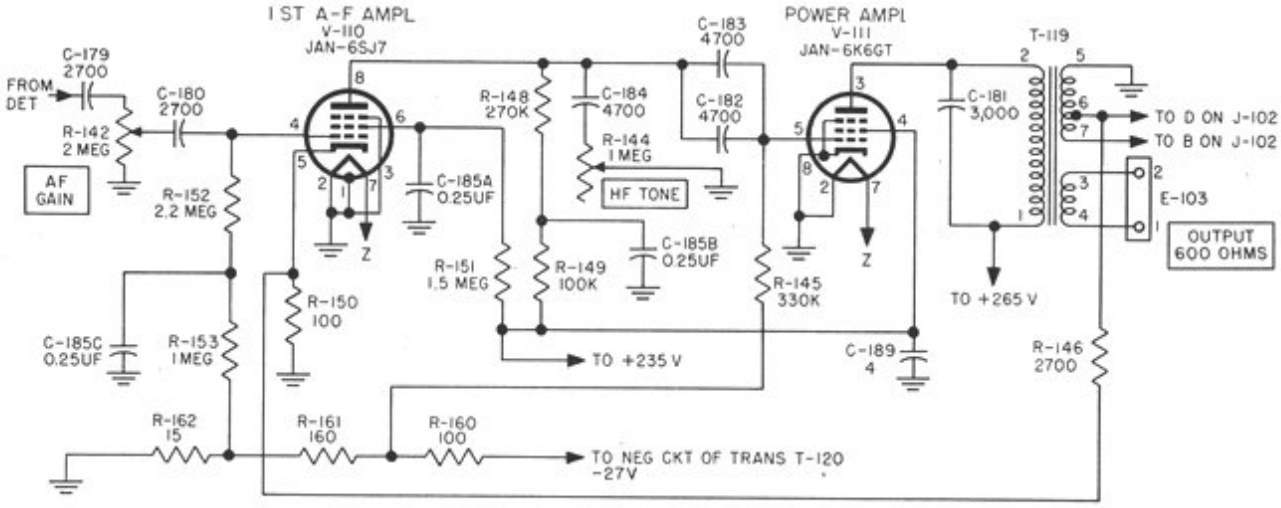

NOTES:
1. ALL RESISTOR VALUES IN OHMS UNLESS OTHERWISE SPECIFIED.
2. ALL CAPACITOR VALUES IN UUF UNLESS OTHERWISE SPECIFIED.

TM 899-22

Figure 22. First audio and power amplifier stages, simplified schematic diagram.

5–6 of T–119. Only headset reception is then possible.

48. Power Supply Stage V–114 (fig. 23)

The power supply consists of a conventional full-wave rectifier (V–114) which supplies the plate, bias, and filament voltage needs of most of the tubes; and it includes a voltage regulator (V–113) for the supply of screen-grid and oscillator-plate potentials. The primary of power transformer T–120 is tapped to permit use of input voltages ranging from 110 to 240 volts at 60 cycles. Power switch S–104B closes the primary circuit of the power transformer. Switch S–105 is the primary tap switch. The high-voltage secondary of T–120 has a potential of 345 volts each side of the center tap, which is applied to the plates of rectifier tube V–114. The other secondary windings on the transformer provide 6.4 volts for tube filaments and panel lights, and 5 volts for the rectifier filament. The center tap of the high-voltage secondary is not returned directly to ground but is 27 volts negative with respect to ground potential. The 27-volt potential is used in the RF GAIN control and AVC circuits. Resistors R–160, R–161, and R–162, between the center tap and ground, form a voltage divider and supply —17-volt and —1.5-volt bias potentials. The high-voltage output filter consists of capacitors C–191, C–190, and C–189 and choke coils L–120 and L–121. The output voltage of the first filter section (265 volts) is supplied directly to the power amplifier; the output of the second filter section (235 volts) is supplied to all stages except the oscillators through the REC MOD and REC CW positions of S–104A rear. A regulated supply of 150 volts dc is provided by the use of tube V–113 in series with resistor R–159 across the 235-volt output. The regulator is connected across the rectifier output by switch S–104A rear only in the REC CW and REC MOD positions.

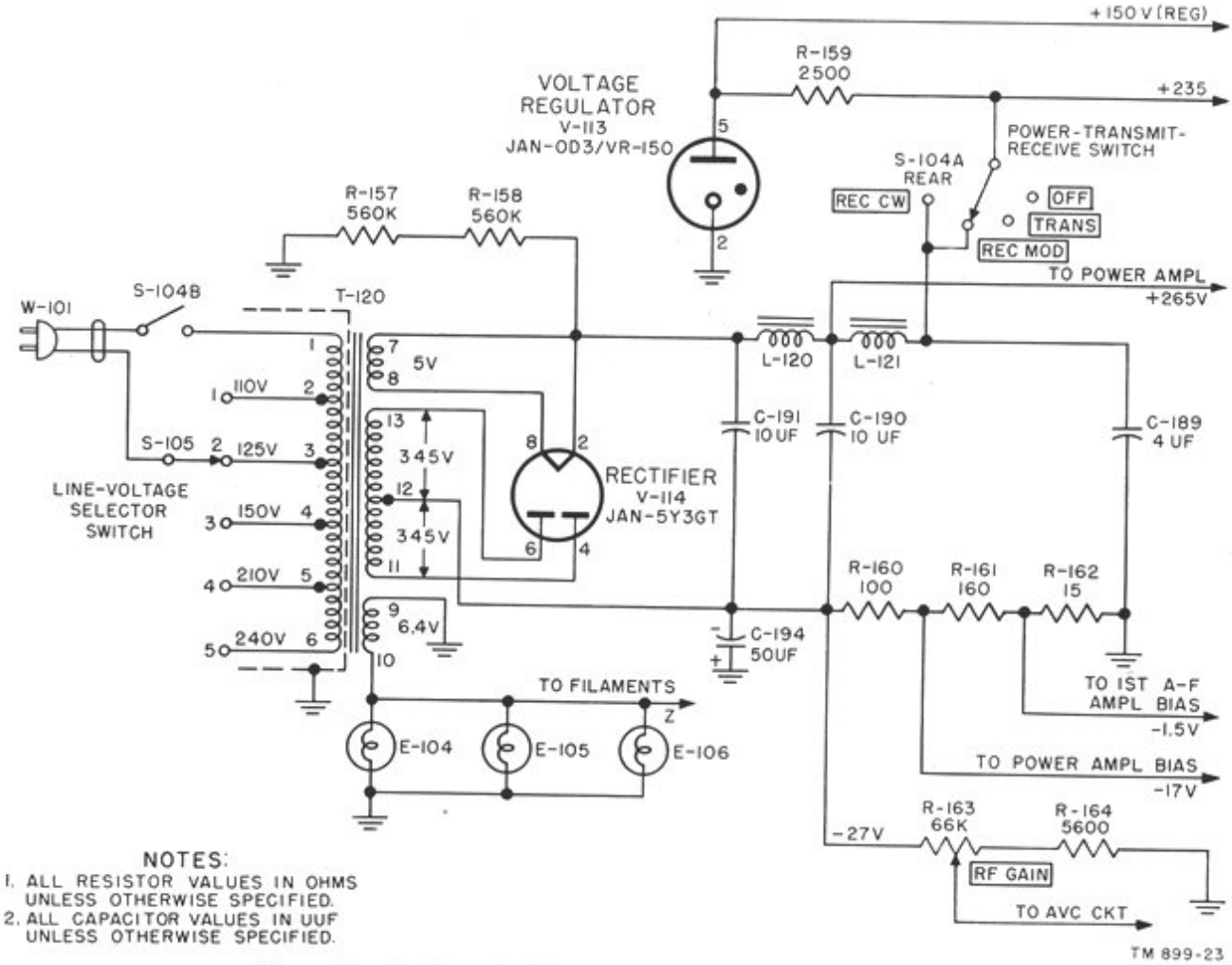

Figure 23. Rectifier and voltage regulator, simplified schematic diagram.

CHAPTER 5

FIELD AND DEPOT MAINTENANCE INSTRUCTIONS

Section I. PREREPAIR PROCEDURES

Note. This chapter contains information for field and depot maintenance. The amount of repair that can be performed by units having field and depot maintenance responsibility is limited only by the tools and test equipment available and by the skill of the repairman.

49. Tools, Materials, and Test Equipment

Tools, materials, and test equipment needed for performing the prerepair procedures outlined in this section are listed below:

Tool Equipment TE–113.

Cleaning fluid: Solvent, dry-cleaning (SD); Federal specification P–S–661a.

Tube Tester I–177.

Test Unit I–176: test meter; 0–1,000 volts a. c., 0 to 5,000 volts d. c.; 0 to 10 amperes a. c., 0 to 5 amperes d. c.; 0 to 10 megohms.

50. Removal of Pluck-out Parts

a. Removing Tubes (fig. 24).

(1) All tubes are accessible from the top of the chassis and are removable without further disassembly.

(2) Using a tube puller, remove the tubes from their sockets. When removing tube V–113, open the tube clamp before pulling the tube. If a tube puller is not available for use, make sure that the tubes have cooled sufficiently; then, with the fingers, pull up the tube. Do not rock the tube or jiggle it in its socket if it can be extracted by a direct upward pull. Rock it *gently* if it does not release easily. Jiggling a tube in its socket during removal spreads the contacts. Label each tube as soon as it is removed so that it may be replaced later in its proper socket.

b. Removing Crystal. The crystal is a plug-in part and is removed in the same fashion as a tube.

c. Removing Lamps. The three lamps located behind the front panel are bayonet-type lamps and may be removed as follows: press lamp inward, turn ¼ turn counterclockwise, and withdraw from the socket.

51. Cleaning, Inspecting, and Testing

After the pluck-out parts have been removed from the receiver, clean the receiver and the removed parts. Refer to paragraph 24 for cleaning instructions.

a. Test all moving parts for ease of motion. Binding and scraping may be eased by a light application of #0000 sandpaper. Corrosion or dirt will interfere with electrical continuity and mechanical efficiency by shorting or insulating circuits or by jamming moving parts. Switches must work easily with no searching for contact positions. Examine and clean the following parts before operating the receiver:

(1) Tube sockets.

(2) Crystal assembly contact points and socket.

(3) Switches, mountings, and shafts.

(4) Dial assembly, tuning drive, and gearing.

(5) Variable capacitors and trimmers.

(6) Lamp sockets.

(7) Phone jack and monitor jack.

(8) Control shafts.

(9) Control shaft for CRYSTAL PHASING control.

(10) Line cord and plug.

(11) External connections.

b. Test the tubes for improper emission, leakage, and short circuits; use a tube tester or place doubtful tubes in a receiver known to be operating normally.

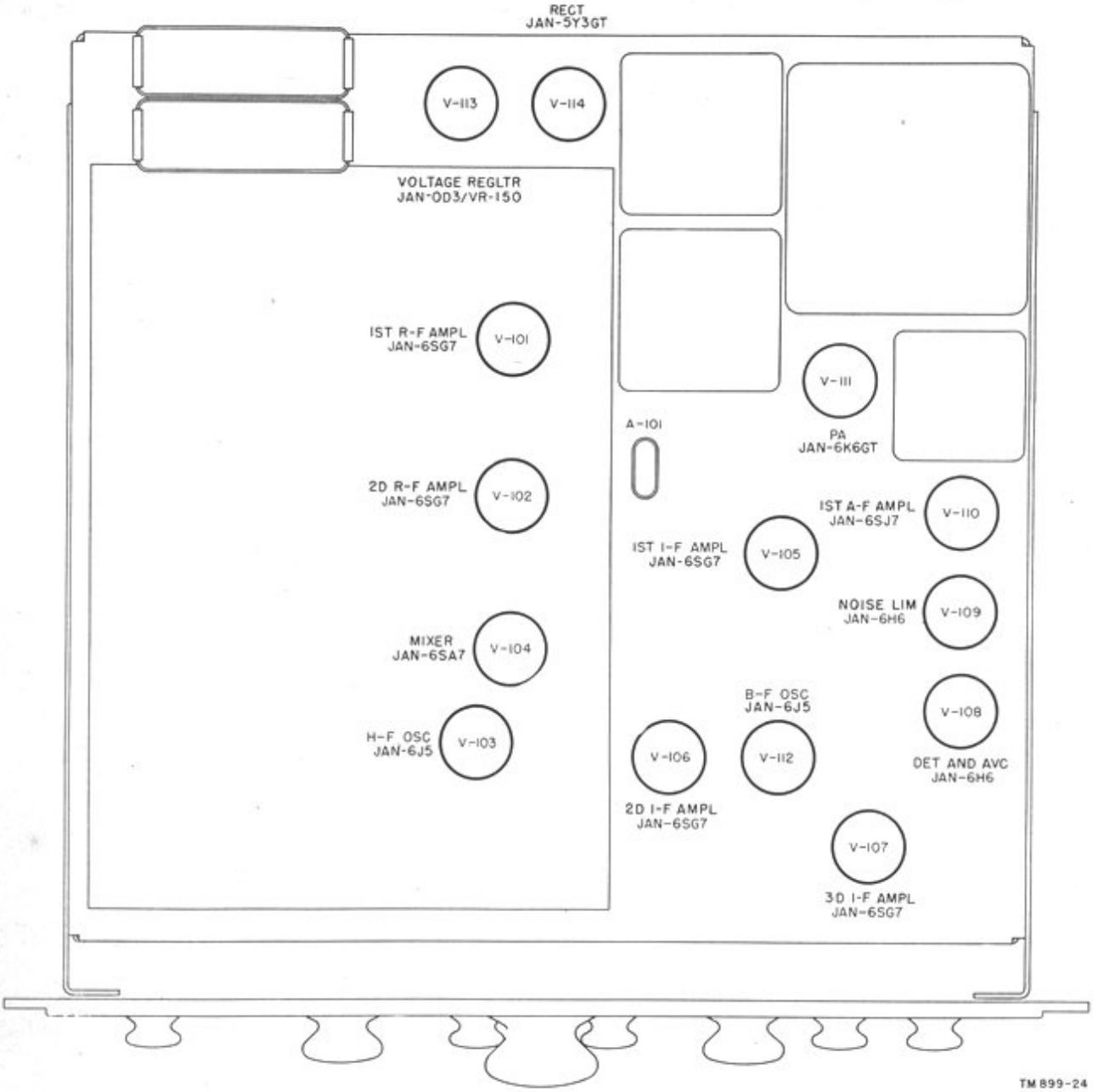

Figure 24. Tube location diagram.

c. Resolder leads known to be loose or broken. Replace all items that appear broken.

d. If the main tuning dial gearing and mask do not operate properly, refer to section III of this chapter for information.

52. Reassembling Receiver

Replace the tubes, crystal, and pilot lamps in the receiver. Be sure that the tubes are put back in the correct sockets (fig. 24).

Warning: When servicing the radio receiver, be extremely careful because of the high voltages exposed. Keep one hand in pocket when measuring socket voltages with the probe. Before touching any part after the voltage is shut off, short the part to ground.

53. Trouble-shooting Procedures

The first step in servicing a defective receiver is to *sectionalize* the fault. Sectionalization means tracing the fault to the *circuit or stage* responsible for the abnormal operation of the receiver. The second step is to *localize* the fault. Localizaton means tracing the fault to the defective *part* responsible for the abnormal condition. Some faults such as burned-out resistors and shorted transformers can often be located by sight, smell, or hearing. The majority of faults, however, must be localized *by checking voltage and resistance.*

a. SECTIONALIZATION. Careful observation of the performance of the receiver on the various bands and under the various control settings may sectionalize the fault to a particular stage or circuit. The equipment performace checklist (par. 32) should be used as the first step in sectionalization. While using this checklist, remember that many components are common to two or more stages. In addition, some components form a part of a particular stage only during operation on one band. For example, an r-f amplifier stage which operates satisfactorily on one band will operate satisfactorily on all bands unless the band switch or the components of an individual band are defective. If the stage is operating normally on all bands, the band switching section can be considered normal. The trouble-shooting chart (par. 59) will also be useful in sectionalizing trouble to r-f, i-f, or a-f circuits, after which signal substitution and/or voltage-resistance checks may be used to localize the trouble.

b. LOCALIZATION. The tests listed below aid in isolating the source of trouble. To be effective the procedure should be followed in the order given. Remember that servicing procedure should cause no further damage to the receiver. First, trouble should be localized to a single stage or circuit. Then the trouble may be isolated within that stage or circuit by appropriate voltage, resistance, and continuity measurements. The service procedure is summarized as follows:

(1) *Visual inspection.* Through this inspection alone (par. 51), the repairman may frequently discover the trouble or determine the stage in which the trouble exists. This inspection is valuable in avoiding additional damage to the receiver which might occur through improper servicing methods and in forestalling future failures.

(2) *Input resistance measurements.* These measurements (par. 57) prevent further damage to the receiver from possible short circuits. Since this test gives an indication of the condition of the filter circuits, its function is more than preventive.

(3) *Operational test.* The operational test (par. 58) is important because it frequently indicates the general location of trouble. In many instances the information gained will determine the exact nature of the fault. In order to utilize this information fully, interpret all symptoms in relation to one another.

(4) *Trouble-shooting chart.* The trouble symptoms listed in this chart (par. 59) will aid greatly in sectionalizing and localizing trouble.

(5) *Signal substitution.* The principal advantage of the signal substitution method (par. 60) is that it usually enables the repairman to localize a trouble accurately and quickly to a given stage when the general location of the trouble is not immediately evident from the above tests.

(6) *Stage-gain charts.* These charts (par. 64) can be used to localize obscure, hard-to-find troubles.

(7) *Intermittents.* In all these tests the possibility of intermittents should not be overlooked. If present, this type of trouble often may be made to appear by tapping or jarring the set.

54. Trouble-shooting Data

Take advantage of the material supplied in this manual. It will help in the rapid location of faults. Consult the following trouble-shooting data:

Fig. or par. ref.	Description
Fig. 44	Radio Receiver R-320/FRC, schematic diagram.
Par. 59	Trouble-shooting chart.
Fig. 25	Radio Receiver R-320/FRC, tube socket voltage and resistance diagram.
Fig. 26	Radio Receiver R-320/FRC, terminal board voltage and resistance diagram.
Figs. 18, 36 through 40.	Selectivity curves.
Figs. 27 through 31	Top and bottom views of chassis.
Par. 64	Stage-gain charts.

55. Test Equipment Required for Trouble Shooting

The test equipment required for trouble shooting Radio Receiver R-320/FRC is listed below. The technical manuals associated with the test equipment are also listed.

Test equipment	Technical manual
Signal Generator I-72 or equal	TM 11-307.
Oscillator I-151 or equal	TM 11-2524.
Tube Tester I-177 or equal	TM 11-2627.
Electronic Multimeter TS-505/U or equal.	

56. General Precautions

Whenever the receiver is to be serviced, observe the following precautions very carefully.

a. Be careful when working inside the equipment; dangerous voltages are exposed.

b. Careless replacement of parts often makes new faults inevitable. Note the following points:

(1) Note the position of all leads. If the part, such as a transformer, has a number of connections, tag each of the leads to it.

(2) Be careful not to damage other leads by pulling or pushing them out of the way.

(3) Do not allow drops of solder to fall into the equipment or they may cause short circuits.

(4) A carelessly soldered connection may create a new fault. It is very important to make well-soldered joints, since a poorly soldered joint is one of the most difficult troubles to find.

(5) When a part is replaced in r-f or i-f circuits, it must be placed exactly as the original one was. A part which has the same electrical value but a different physical size may give difficulty during operation. Replacement leads should also be placed or routed exactly as the original ones.

(6) Give particular attention to proper grounding when replacing a part. Use the same grounding point as that in the original wiring. Failure to observe these precautions may result in loss of gain or oscillation of the circuit.

57. Checking B+, Bias, and Filament Circuits for Shorts

Trouble within the receiver often may be detected by checking the resistance of the filament and high-voltage circuits before applying power to the equipment, thereby preventing damage to the power supply. Make the following checks before attempting to put the receiver in operation. Disconnect power cord W-101 from the a-c source and place power-transmit-receive switch S-104 at OFF.

a. Check resistance between terminals 7 and 12 of transformer T-120. The reading should be about 1.1 megohms. If it is much less, check for shorted capacitor C-190, C-191, or C-189. Any such short must be corrected before power is applied to the receiver, or the transformer will be damaged.

b. Check the resistance between terminals 12 and 13 and between 12 and 11 on transformer T-120. The readings should be about 80 ohms. If either reading is much less, the coils of the transformer are shorted. Find and repair the short before applying power to the equipment, or the transformer will be burned out.

c. Check the resistance of terminal 12 on transformer T-120 to ground. The reading should be about 275 ohms. If it is much less, check capacitor C-194 for a short. This element affects the bias voltage supplies. Repair any shorts before turning on the receiver, or the equipment may be damaged.

d. Check the resistance (if possible) between terminals 9 and 10 on transformer T-120. The reading should be about 0.05 ohm. If it can be determined as zero, a shorted tube filament or shorted transformer winding is indicated. Re-

move all tubes and lamps and check transformer coil resistance again to make sure the fault is not in the transformer or wiring. Then check all tube and lamp filaments until the short is found.

58. Operational Test

With the equipment properly connected for normal operation, operate the equipment as described in the equipment performance checklist (par. 32). This checklist is important because it frequently indicates the general location of the trouble (see par. 53*a*).

59. Trouble-shooting Chart

The following chart is supplied as an aid in locating trouble in the receiver. This chart lists the symptoms which the operator may observe, either visually or audibly, while making a few simple tests. The chart also shows how to sectionalize trouble quickly to the a-f, i-f, or r-f stages. The signal substitution tests outlined in paragraphs 60 through 63 can then be used to supplement this procedure and to determine the defective stage. A tube check and voltage and resistance measurements of this stage should then be sufficient to isolate the defective part. Normal voltage and resistance measurements are given in figures 25 and 26. Do not use the chart until all the checks and tests of paragraphs 57 and 58 (including those of the equipment performance checklist, par. 32) have been made. For some troubles, the trouble-shooting chart may not be adequate to localize the trouble to a stage. In such cases it will be necessary to resort to signal substitution.

Symptom	Probable trouble	Correction
1. Power-transmit-receive switch in REC MOD or REC CW position. Dial lamps do not light.	1. Power cord leads broken or transformer primary tap switch (S-105) defective.	1. Check cord and primary tap switch.
	Power-transmit-receive switch (S-104) faulty.	Check switch and leads.
2. No receiver output. Dial lamps lit.	2. Open tube heater.	2. Feel all tubes cautiously after set has been running 10 minutes.
	Regulator tube V-113 internally shorted.	Replace tube.
3. Reception weak. With no signal tuned in, roaring noise is not heard when AF GAIN and RF GAIN controls are set at maximum.	3. Weak tubes.	3. Check tubes.
	Low plate or screen voltage due to shorted capacitor in plate or screen circuit.	Check voltage and resistances.
	Receiver not properly alined.	Realine the receiver.
4. Weak or no output on one or more bands.	4. Defective circuit components in first r-f, second r-f, or mixer stage for bands concerned.	4. Locate defective stage, using signal substitution procedure of par. 63.
	Defective contacts on RANGE switch.	Check continuity of switch contacts
	Improperly alined or defective circuit component in h-f oscillator stage.	Realine stage or replace defective component.
5. No receiver output with a-f signal applied to pin 4 of a-f amplifier V-110.	5. Faulty a-f stage.	5. Use signal substitution (par. 61) to locate defective a-f stage. Test tube and take tube socket voltage and resistance measurements.
6. A-f circuits satisfactory but no receiver output is obtained with 455-kc i-f signal applied to grid (pin 8) of mixer stage V-104.	6. Faulty i-f stage.	6. Use signal substitution (par. 62) to locate defective i-f stage. Test tube and take tube socket voltage and resistance measurements.
7. A-f and i-f circuits satisfactory but no receiver output is obtained when modulated r-f signal is applied to antenna input terminal and receiver is tuned to signal.	7. Faulty r-f stage.	7. Use signal substitution (par. 63) to locate defective r-f stage. Test tube and take voltage and resistance measurements.
8. Reception distorted.	8. Open grid resistor or leaky capacitor in audio circuits.	8. Use headset with 0.1-uf (microfarad) capacitor in series with one lead to localize faulty stage. Check grid circuits.

Symptom	Probable trouble	Correction
9. Noisy and fading reception.	9. Faulty gain controls. Faulty antenna circuit.	9. Check control slider contacts. Check antenna installation for leakage paths to ground and for loose connections.
10. Excessive noise.	10. Faulty limiting. Defective tube.	10. Check V-109 and associated stages. Check tubes.
11. Hum in output.	11. Open filter capacitor (C-189, C-190, or C-191) in power supply circuit.	11. Check each capacitor by disconnecting positive lead from each section and testing with an ohmmeter. Open capacitors read infinite ohms. Good capacitors cause pointer first to go up scale rapidly and then to return more slowly toward infinity mark because of charging current.
12. Oscillation (indicated by whistle or howl).	12. Defective tube, poor shielding, interstage coupling, or poor ground connection to chassis.	12. Ground grids of each stage in turn through a 0.1-uf capacitor, working from input to output, until oscillations cease. Trouble may be either in stage whose grounded grid caused oscillations to stop or in preceding stage.
13. Intermittent noise	13. Defective tube, resistor, capacitor, or connection.	13. Using signal substitution, remove tube of stage previous to stage at which substitute signal is to be introduced. Duplicate the action (such as shaking or jarring receiver) which causes intermittent noise. Stage under test when noise is first noticed is defective. When trouble has been sectionalized, or if intermittent cannot be induced by shaking or jarring, use an insulated prod to tap or slightly move all tubes, resistors, capacitors, and soldered connections. Do this in stage known to be defective, or, if trouble has not been sectionalized, in each stage of entire equipment.
	Defective volume control	Replace volume control.
14. Turning RF GAIN control does not vary output (noise limiter—avc switch at MAN).	14. RF GAIN potentiometer defective.	14. Replace potentiometer.
	Resistor R-143 open	Replace resistor R-143.
	Switch S-103 defective	Check switch output and leads.
15. Turning SELECTIVITY switch yields little or no output on narrow bands.	15. Misalinement of tuned i-f tank circuits.	15. Realine i-f stages.
	Crystal Y-101 defective	Check crystal connections and, if necessary, replace crystal.
16. No output in AVC NL or MAN NL position; output in AVC and MAN positions.	16. Noise-limiter tube V-109 defective.	16. Replace tube.
	NOISE LIMITER potentiometer R-135 shorted.	Remove short or replace potentiometer.
	Resistor R-141 open	Replace resistor.
17. No or weak tone produced when receiving cw (power-transmit-receive switch at REC CW).	17. Defective component in bfo stage.	17. Replace defective component.

CONDITIONS FOR TEST	
VOLTAGE MEASUREMENTS TAKEN WITH POWER CONNECTED, CHASSIS UNGROUNDED AND NO SIGNAL INPUT. RESISTANCE MEASUREMENTS TAKEN WITH POWER DISCONNECTED.	
CONTROL	SETTING
POWER-TRANSMIT-RECEIVE SWITCH	REC CW
RANGE	1
RF GAIN	MAXIMUM
AF GAIN	MAXIMUM
SELECTIVITY	2
DIVERSITY IF GAIN	MAXIMUM
NOISE LIMITER-AVC SWITCH	MAN
NOISE LIMITER	MAXIMUM
HF TONE	MAXIMUM

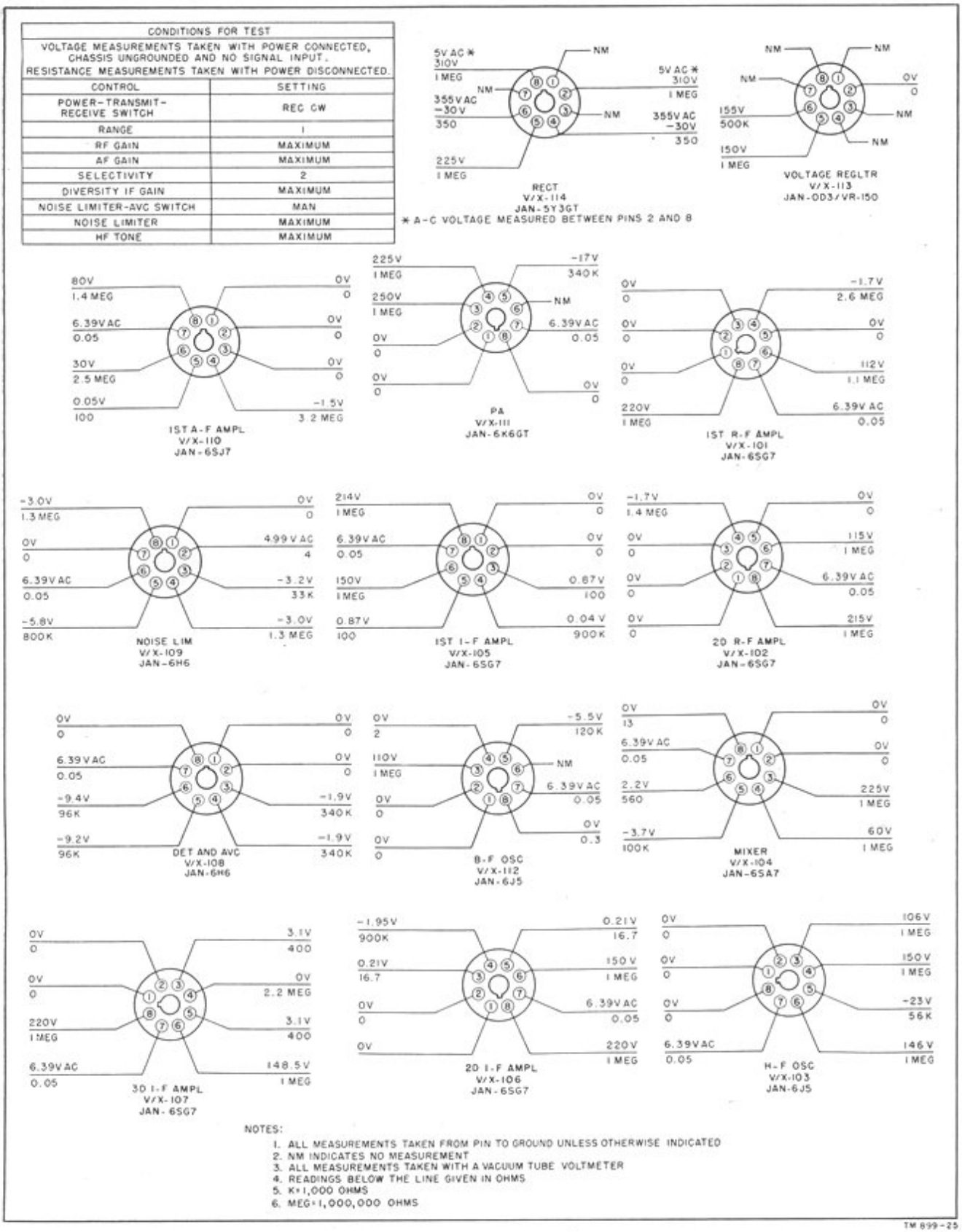

Figure 25. Radio Receiver R-320/FRC, tube socket voltage and resistance diagram.

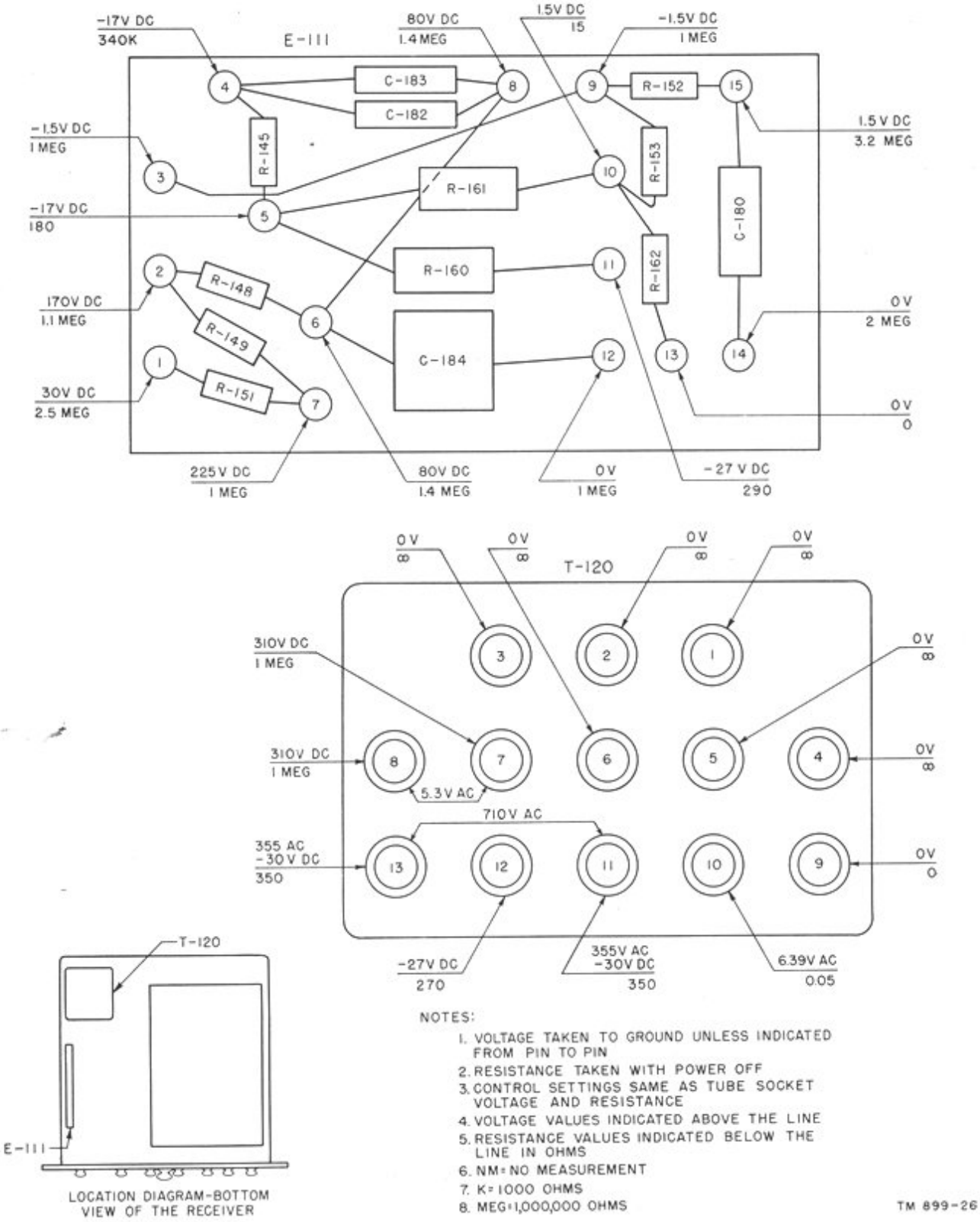

Figure 26. Radio Receiver R-320/FRC, terminal board voltage and resistance diagram.

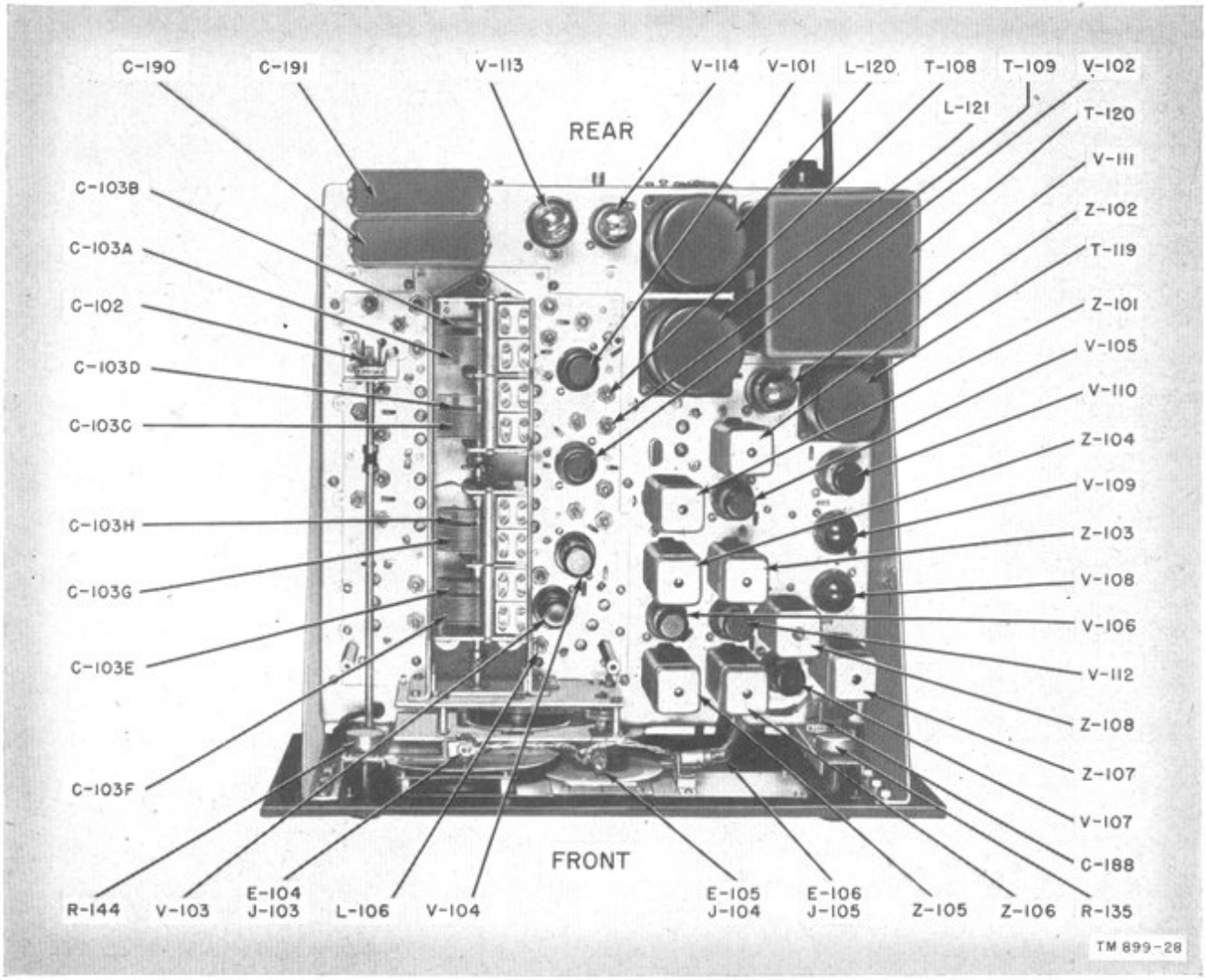

Figure 27. Radio Receiver R-320/FRC, top view of chassis.

60. Signal Substitution Notes

a. Signal substitution requires a source of a-f, i-f, and r-f signals. Signal Generator I–72 is suitable for the r-f and i-f signals. Oscillator I–151 is adequate for the audio signals.

b. In addition, a headset or permanent magnet loudspeaker is necessary.

c. A multimeter and tube tester are also needed to isolate the defective part after the faulty stage has been indicated by signal substitution. Test Unit I–176 and Tube Tester I–177 are satisfactory.

d. In all tests indicated in the following paragraphs, ground one lead from the signal generator to the receiver chassis and connect the other lead to the point indicated through a 0.1-uf capacitor.

e. Note the volume and listen for serious distortion from the loudspeaker or headset at the various points during the signal substitution procedure. If possible, compare the result with a receiver known to be in good condition.

f. Check the wiring and soldering in each stage during the procedure.

Note. Do not remove the shield or can of a tuned unit until the trouble has been traced to that unit. Do not damage the wiring by pushing it back and forth during inspection. Be careful not to damage the receiver in any other way.

g. Misalinement of one or more stages of the receiver will cause reduced output. Misalinement of the h-f oscillator may prevent any output.

h. When trouble has been localized to a given stage, first test the tube if such a test is indicated; then measure the voltage; and finally measure the

resistance at the tube socket of that stage.

i. Trouble in a circuit or stage may cause changes in the voltage or resistance measurements at the tube socket. The notes included in this paragraph are merely given as a guide, and other procedures, such as voltage and resistance measurements on individual parts, may and should be used.

j. Remove only *one* tube at a time when testing. Check the number of the tube; test the tube and, if it is found defective, replace it. If the tube is good, return it to its socket before another tube is removed for testing.

k. Each step presupposes satisfactory completion of all previous steps. Isolate and clear any trouble located before proceeding with succeeding steps.

61. A-f Tests

a. Terminal 3 of Tube V–111 (Plate of Power Amplifier). Apply an audio signal to the plate, pin 3, of tube V–111 and listen for a low signal in headset or loudspeaker, whichever is used. If no signal is heard, check T–119 and C–181.

b. Terminal 5 of Tube V–111 (Grid of Power Amplifier). Apply an audio signal to pin 5 and listen for an improved signal. This output should be greater than the signal applied to the plate (pin 8). If the output is not louder, test the tube. If there is no output, check capacitor C–182 or C–183 for a short.

c. Terminal 8 of Tube V–110 (Plate of First Audio). Connect the generator to pin 8

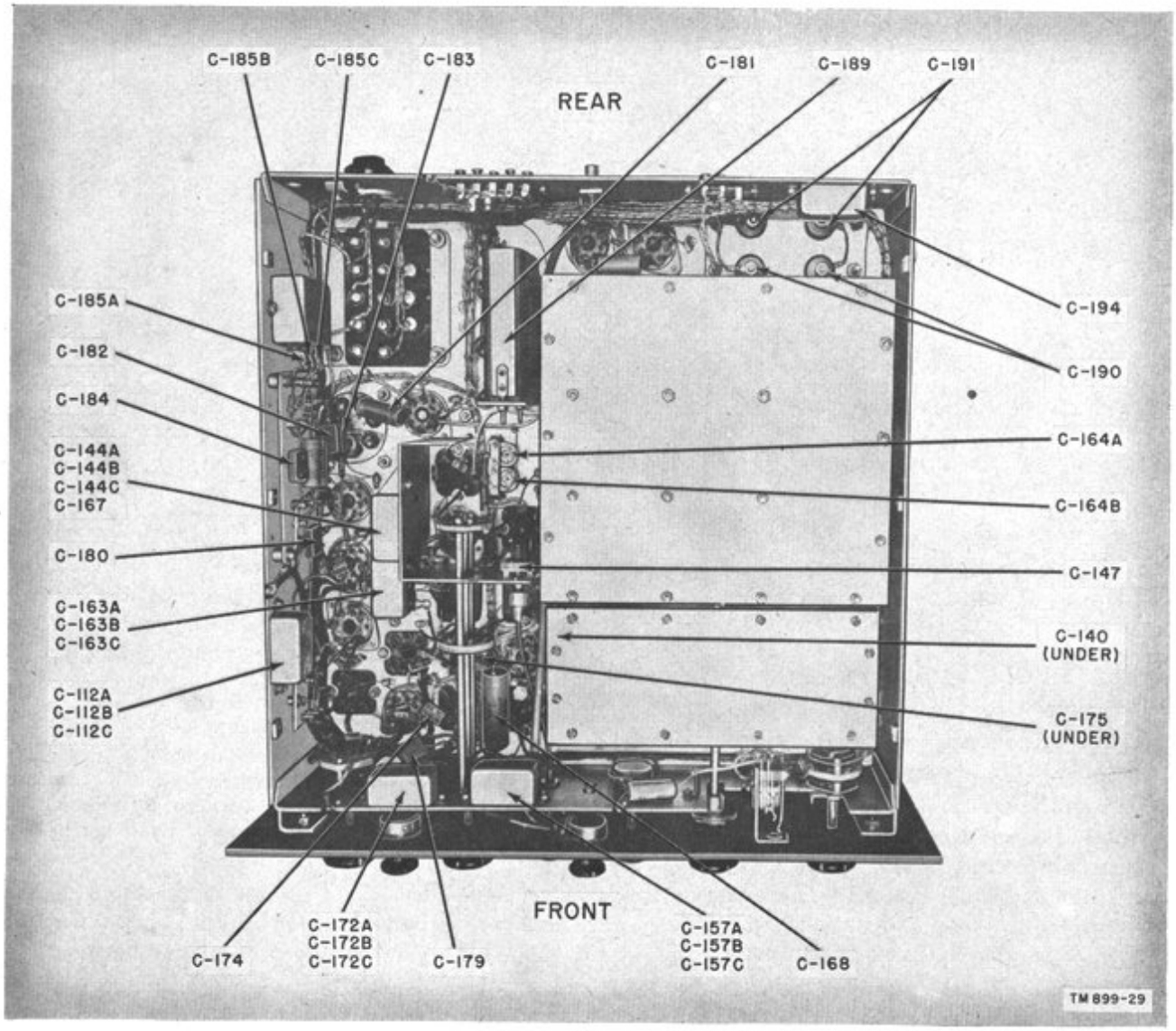

Figure 28. Radio Receiver R–320/FRC, bottom view of chassis, showing capacitors.

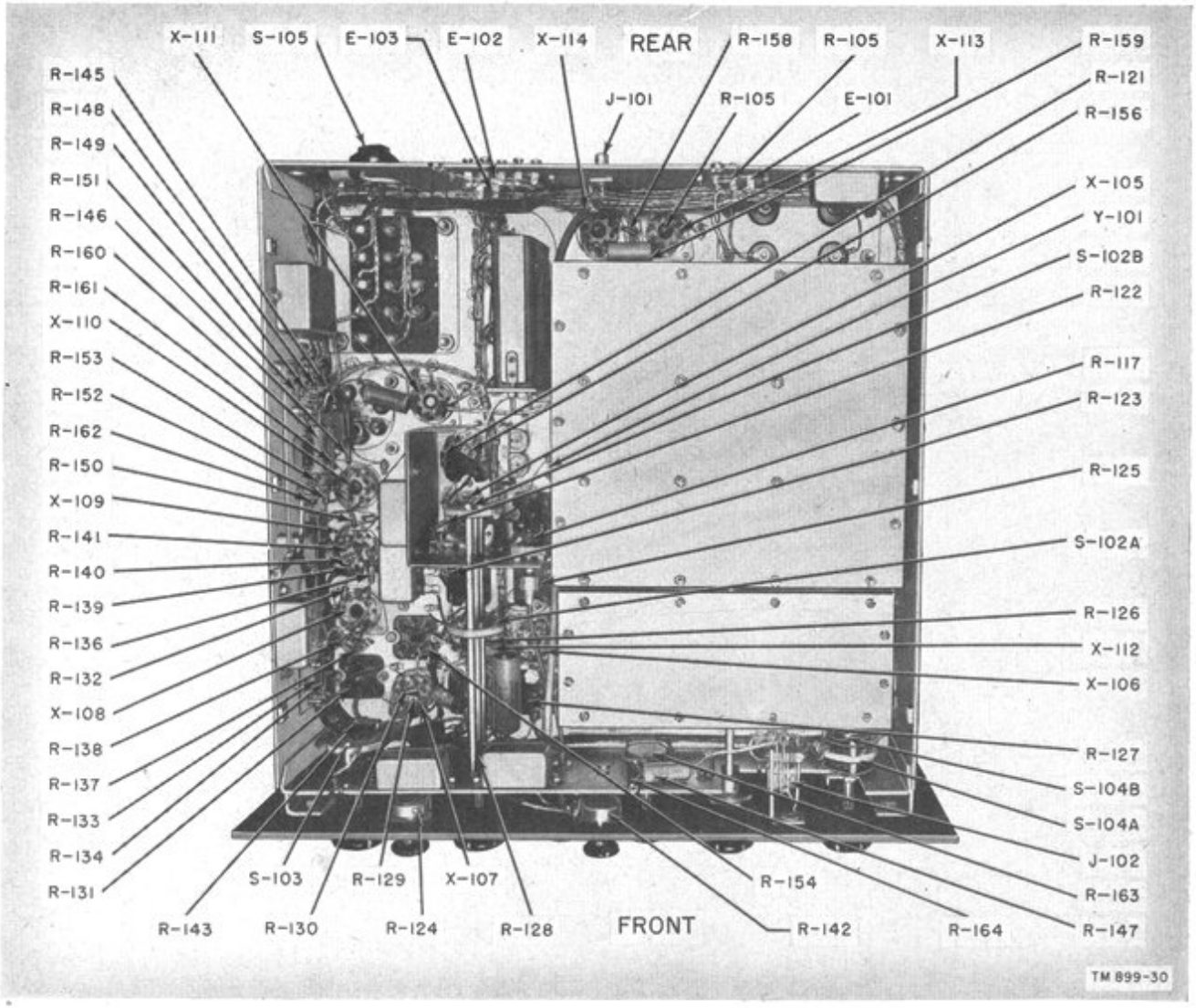

Figure 29. Radio Receiver R-320/FRC, bottom view of chassis, showing additional components.

and apply an audio signal. If there is little or no audio output, check for an open capacitor C–182 or C–183. If this does not isolate the faulty component, check the voltage and resistance measurements at the tube socket.

d. Terminal 4 of Tube V–110 (Grid of First Audio). Introduce an audio signal at pin 4 and listen for an output tone. If there is no output, check for an open resistor R–148 or R–149 or shorted capacitor C–185B. Check the voltage on pin 4. Low or no voltage at pin 4 may result in increased but distorted output, or in no output. Check for a short in capacitor C–185C if output is distorted; if there is no output, check for an open resistor R–152 or R–153. If voltage at pin 4 is proper, check the voltage and resistance at the other tube socket terminals.

62. I-f Tests

Set the controls as listed below for all i-f testing.

Control	Setting
RANGE switch	Band 1.
AF GAIN control	Maximum.
RF GAIN control	Maximum.
DIVERSITY IF GAIN control	Maximum.
Noise limiter-avc switch	MAN.
SELECTIVITY switch	Position 2.
Power-transmit-receive switch	REC MOD.
Line voltage selector switch	110 volts.
Signal generator output	455 kc (400-cycle, 30-percent modulated). Apply the signal through a capacitor (0.1 uf) in series with the output load.

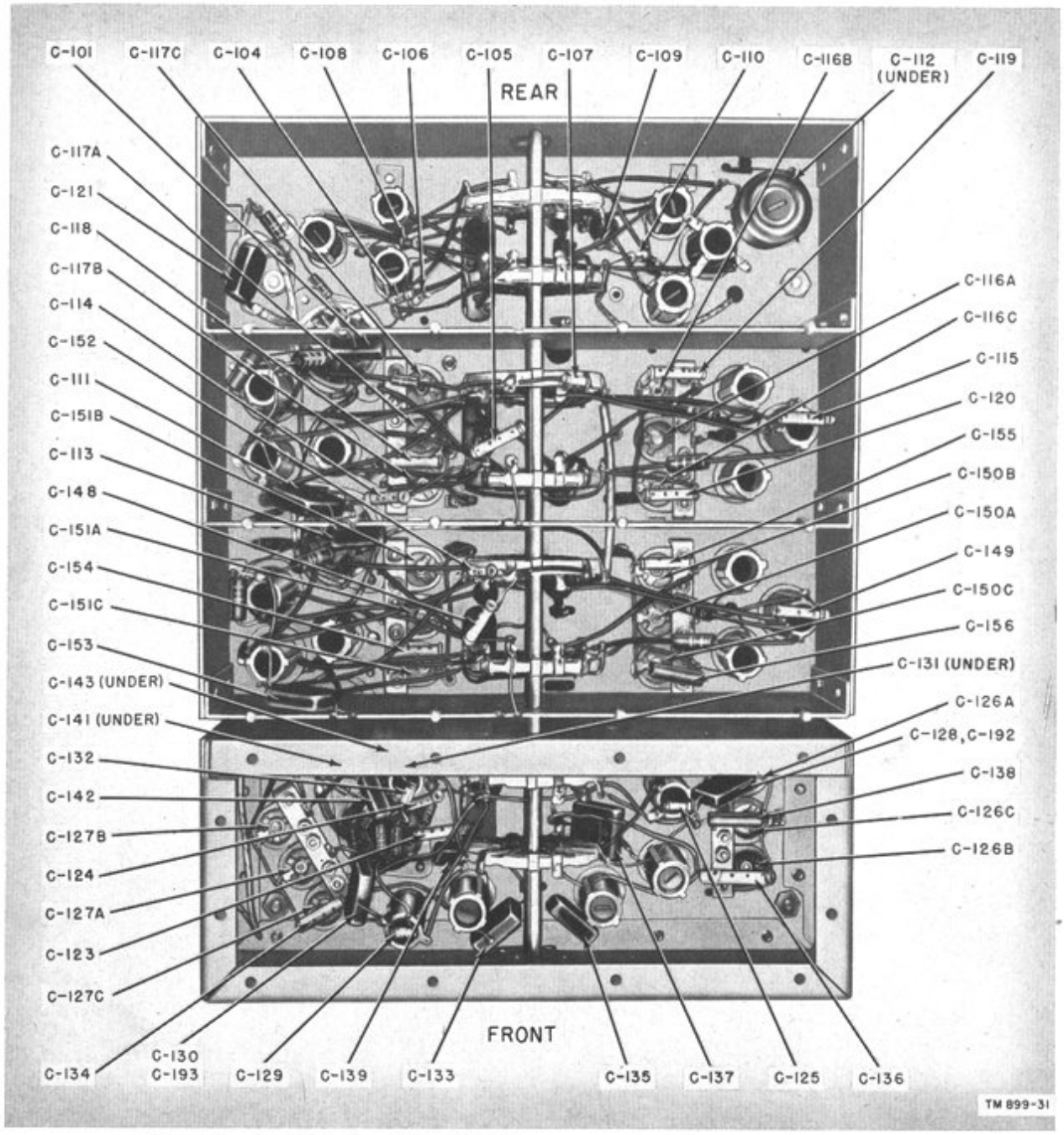

Figure 30. Radio Receiver R-320/FRC, bottom view of r-f chassis, showing c pacitors.

These settings are to be used for all i-f testing. Adjust the signal generator attenuator for a usable signal output level.

a. Terminal 5 of Tube V-108 (Detector Diode Plate). Apply the i-f signal to pin 5 and check for an audio output. If there is little or no signal output, check the tube. If the tube proves good, check for an open connection at terminals 4 and 5 of E-102, open resistor R-135 or R-136, or open secondary winding on transformer T-118.

b. Terminal 8 of Tube V-107 (Third I-F Plate). Connect the generator to pin 8 and test for an audio output. The signal should be stronger at the output terminals with each succeeding step in the signal substitution through the i-f stages after this point. If this point is operative, use it as an index of signal strength (volume level) for further testing. If there is no audio output at this point, take tube socket voltage and resistance measurements and test the

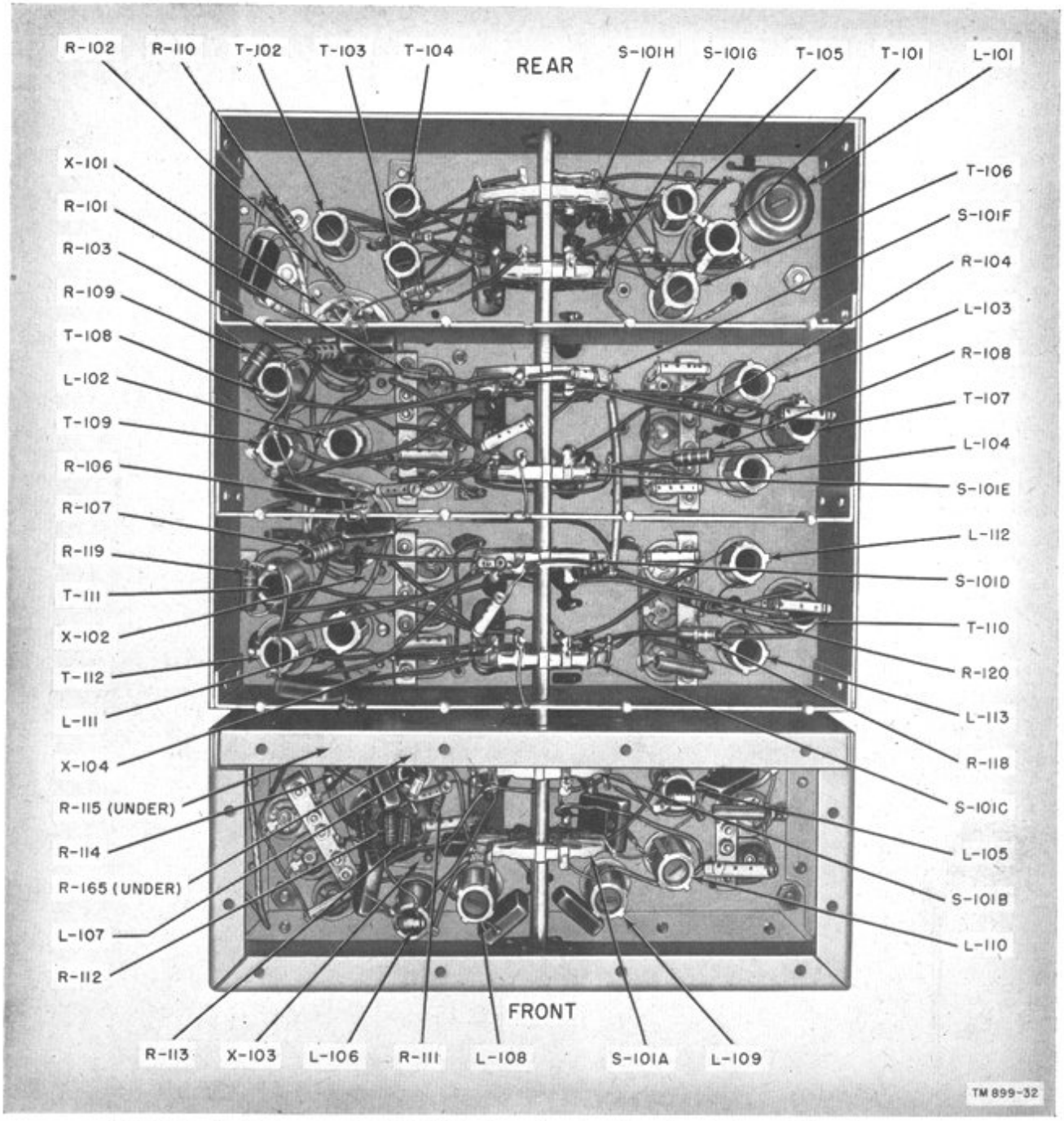

Figure 31. Radio Receiver R-320/FRC, bottom view of r-f chassis, showing additional components.

tube to locate the faulty part.

c. Terminal 4 of Tube V–107 (Third I-F Grid). Apply the i-f signal to pin 4 and check for audio output. The output level should be higher; if it is not, check the tube. Little or no output may be due to a defective secondary winding of transformer T–117, defective resistor R–129, or defective resistor R–130.

d. Terminal 4 of Tube V–106 (Second I-F Grid). Apply the i-f signal to the grid, and check for audio output. The output should be stronger than in the preceding stage; if it is not, check the tube. If the tube proves good, take tube socket voltage and resistance measurements to locate the faulty part.

e. Terminal 4 of Tube V–105 (First I-F Grid). Introduce the i-f signal on pin 4 and listen for an audio output. This output level should be higher than from the second i-f stage. If not, check the tube. If the tube is not faulty, take voltage and resistance measurements at the tube socket to isolate the faulty part.

f. Terminal 3 of Tube V–104 (Mixer Plate). Inject the i-f signal on pin 3 of V–104. If there is little or no output, check coupling transformer T–113 for a faulty winding. Use voltage and resistance measurements to check other circuit components.

63. R-f Testing

The control settings for r-f testing are the same as the settings used for testing the i-f stages. Inject a signal at the point in the stage as noted, with a 180-uuf capacitor in series with the generator output lead. The signal will be an r-f one, with the generator modulation on. Each step of testing after the mixer grid should give an increased output over the stage before.

a. Terminal 8 of Tube V–104 (Mixer Grid). Set the receiver and signal generator to 1,000 kc. Apply a modulated signal to the grid of the mixer and listen for an audio output. If there is no response or if the signal is weak or distorted, check the tube. If the tube is checked and proves good, take tube socket voltage and resistance measurements, and check the h-f oscillator for proper operation. This can be done by checking the tube and socket voltages and resistances.

b. Terminal 4 of Tube V–102 (Second R-F Grid).

(1) Apply the following signals to pin 4 and tune the receiver to each in succession, checking for an audio signal:

RANGE switch setting	Signal frequency
Band 1	1,000 kc.
Band 2	2.9 mc.
Band 3	8.0 mc.
Band 4	15.0 mc.
Band 5	21.0 mc.
Band 6	28.0 mc.

(2) If there is no signal on one or more bands but the stage proves operative, check the individual band coils and components. Examine the wafer contacts on the RANGE switch for proper make. If the stage is not operative on any band, check the tube and, if the tube is good, take tube socket voltage and resistance measurements to help isolate the trouble.

c. Terminal 4 of Tube V–101 (First R-F Grid). Apply the signal generator output lead to pin 4 and follow the procedure outlined in *b* above.

d. Antenna Terminals. Apply the r-f signal to the antenna terminals and follow the procedure given in *b* above. To isolate a defective part, check tube socket voltage and resistance on the first r-f stage and test the individual parts in the antenna circuit.

64. Stage-gain Charts

The stage-gain charts given in this paragraph list the minimum and maximum input voltages required at each of the r-f and i-f stages of the receiver to produce a signal output of 8.7 volts between terminals 4 or 5 and ground on terminal board E–102 (fig. 9). This point is referred to in the charts as the diode output and does not include the gain factor of the audio stages. The signal output at the audio output terminals is

given as the output meter reading in watts. Use these charts as standards when trouble shooting to check the over-all gain of the receiver and the gain of each r-f and i-f stage or group of stages. When the receiver gain is low, localize the defective stage by checking the signal voltage level of each stage against the chart while using the signal substitution method of trouble shooting, or by measuring individual stage gain. Set controls as given below.

Control	Setting
RANGE switch	Band 1.
AF GAIN control	Maximum.
RF GAIN control	Maximum.
DIVERSITY IF GAIN CONTROL	Maximum.
Noise limiter-ave switch	MAN.
SELECTIVITY switch	Position 2.
Power-transmit-receive switch	REC MOD.

a. R–F Stage-Gain Chart.

Band	Freq (mc)	* Input range in microvolts with 10 percent modulated signal and 180-uuf capacitor in series with generator output lead				Diode output (volts)	Output meter (watts)
		Antenna binding post	Control grid, 1st r-f stage	Control grid, 2d r-f stage	Control grid, mixer		
1	1. 0	1. 0–1. 5	5. 0–5. 5	34–38	230–240	8. 7	2. 9
2	2. 9	0. 25–0. 75	1. 20–1. 5	20–25	235–245	8. 7	2. 9
3	8. 0	1. 0–1. 5	2. 0–2. 6	38–44	248–262	8. 7	2. 9
4	15. 0	0. 5–0. 75	0. 9–1. 7	18–23	241–269	8. 7	2. 9
5	21. 0	0. 6–0. 92	0. 8–1. 6	12. 5–16. 0	230–240	8. 7	2. 9
6	28. 0	1. 0–1. 5	2. 0–2. 7	24–30	235–245	8. 7	2. 9

b. I–F Stage-Gain Chart.

Signal generator frequency (kc)	Signal generator output connection with 0.1-uf capacitor in series with output lead	Signal generator output (microvolts)	Diode output (volts)	Output meter (watts)
455	Control grid of tube V–104, mixer	190	8. 7	2. 9
455	Control grid of tube V–105, first i-f amplifier	400	8. 7	2. 9
455	Control grid of tube V–106, second i-f amplifier	4, 300	8. 7	2. 9
455	Control grid of tube V–107, third i-f amplifier	85, 000	8. 7	2. 9

Section III. REPAIRS

65. Replacement of Tuning Unit Gearing Assembly

Before attempting removal of the front panel of the receiver turn the chassis on its side and locate the dial mask gear bushing (figs. 32 and 34). Observe the position of the bushing and turn the RANGE switch until the bushing setscrew ((A) in fig. 32) is exposed in proper position to admit the setscrew wrench supplied with the receiver. Note the RANGE switch setting carefully; after reassembly of the receiver dial drive and panel, the switch and mask must be replaced and mated for the proper mask opening and switch setting. For disassembly procedure, see *a* below.

a. Disassembly.

(1) Remove the control knobs (fig. 10). The TUNING CONTROL knob setscrew may be released with a small screw driver; the other knobs may be removed with the setscrew wrench.

(2) Remove the PHONES jack (fig. 10) by unscrewing the hexagonal nut that holds the jack to the panel and pushing the jack gently back through the opening.

(3) Remove the DIVERSITY IF GAIN and AF GAIN rheostats from the panel, using the same procedure as for the PHONES jack.

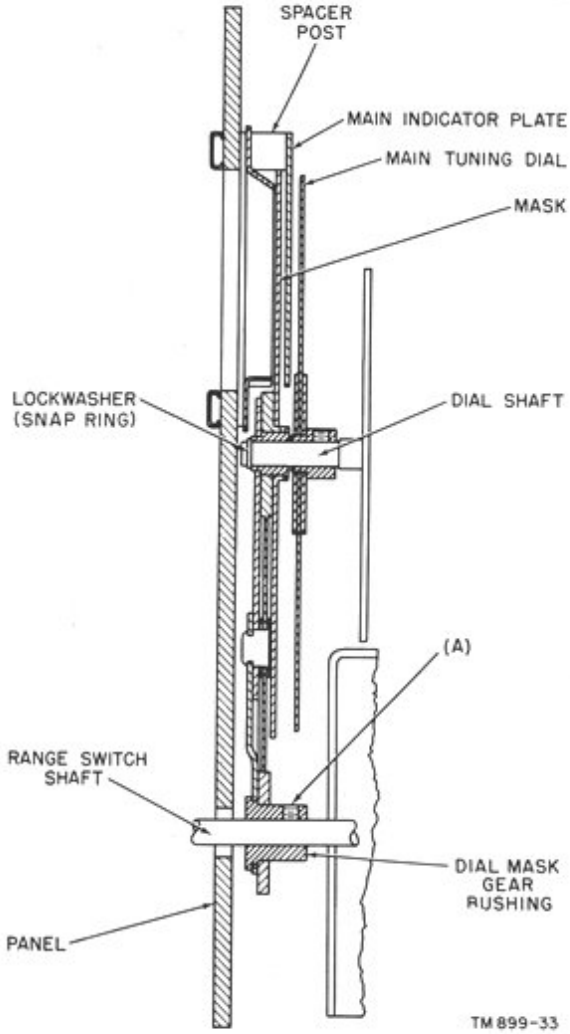

Figure 32. Dial mask assembly, sectional view.

(4) The nameplate window lamp and the vernier tuning dial lamp brackets are spring-mounted; remove them and allow them to hang free from their wiring (fig. 33).

(5) From the top rear of the receiver, remove the dial indicator plate by releasing the two screws that hold the plate to the spacer posts (figs. 32 and 33).

(6) Remove the three nuts and lockwashers at the top of each strut that supports the front panel (fig. 33). This leaves the panel supported only by the single studs at the bottom of each strut. Position the receiver with no pressure on the panel; and, while the receiver is supported, remove the two bottom nuts and lockwashers. The panel is now free and can be removed. After removal, place it carefully, face up, where it will not be scratched or the finish chipped.

(7) Removal of the front panel will expose the dial mask assembly (figs. 32 and 34). Loosen the setscrew (A) mentioned at the beginning of this paragraph, remove the two screws (B) that hold the assembly to the chassis, and remove the snap ring at the end of the dial shaft. The assembly is now free and can be removed; slip it from both shafts evenly to avoid burring the shafts.

(8) Loosen the setscrews in the vernier dial and main tuning dial bushings and remove the dial disks from their shafts (figs. 33 and 34).

(9) Turn the coupling between the main tuning dial shaft and the ganged capacitors until a setscrew is exposed, and loosen the coupling with the setscrew wrench (fig. 33).

(10) Remove the four screws (E) (fig. 33) that hold the gear assembly to the main ganged capacitor channel supports.

(11) Turn the chassis on its side and remove the four nuts and lockwashers from the four stay-bolt studs protruding through the chassis floor. These studs are attached to the rear gear assembly support plate.

(12) The gear assembly is now loose and may be removed. The replacement unit is to be installed in the same position.

b. Reassembly.

(1) Insert the new gear assembly stay-bolts into the holes in the chassis floor and slip the coupling in place. Replace the four screws that were removed in *a* (10) above, and then reset the coupling setscrew lightly. Coat gear teeth lightly with grease, lubricating, instrument (GL), and oil all shaft bearings with a few drops of oil, lubricating, preservative, special (PL). (See lubrication, par. 26.)

(2) Turn the chassis on its side and replace the four nuts on the stay-bolt studs that protrude through the chassis floor.

(3) Turn the chassis back to a horizontal position and slip the main and vernier tuning dials on their shafts. Do not tighten the setscrews at this time.

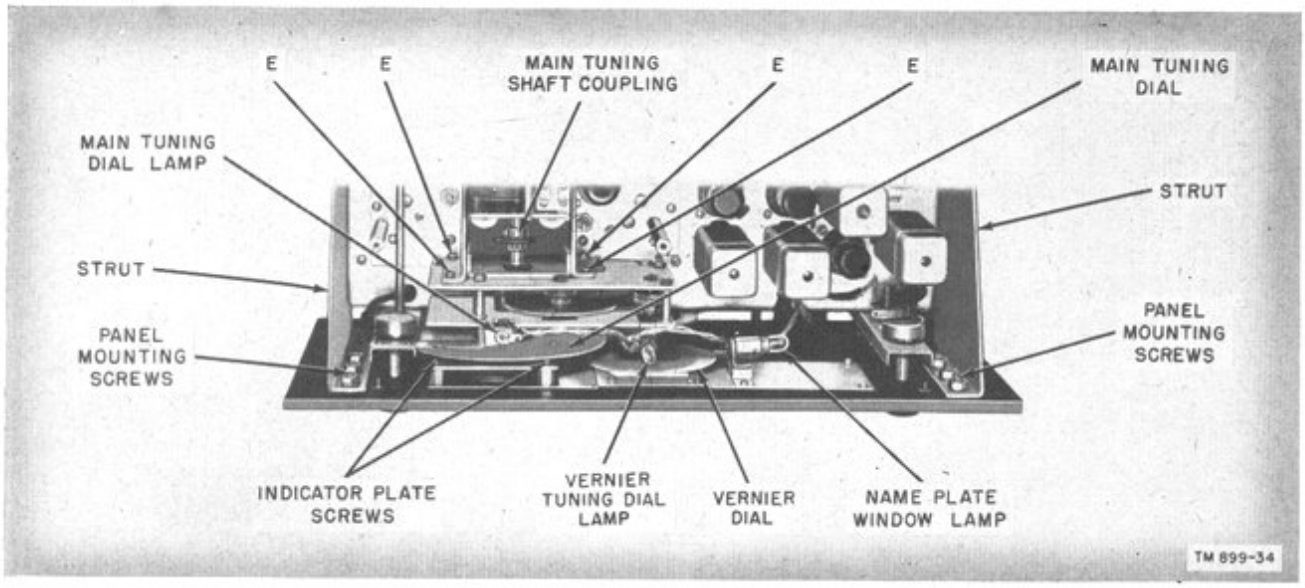

Figure 33. Top view of tuning assembly.

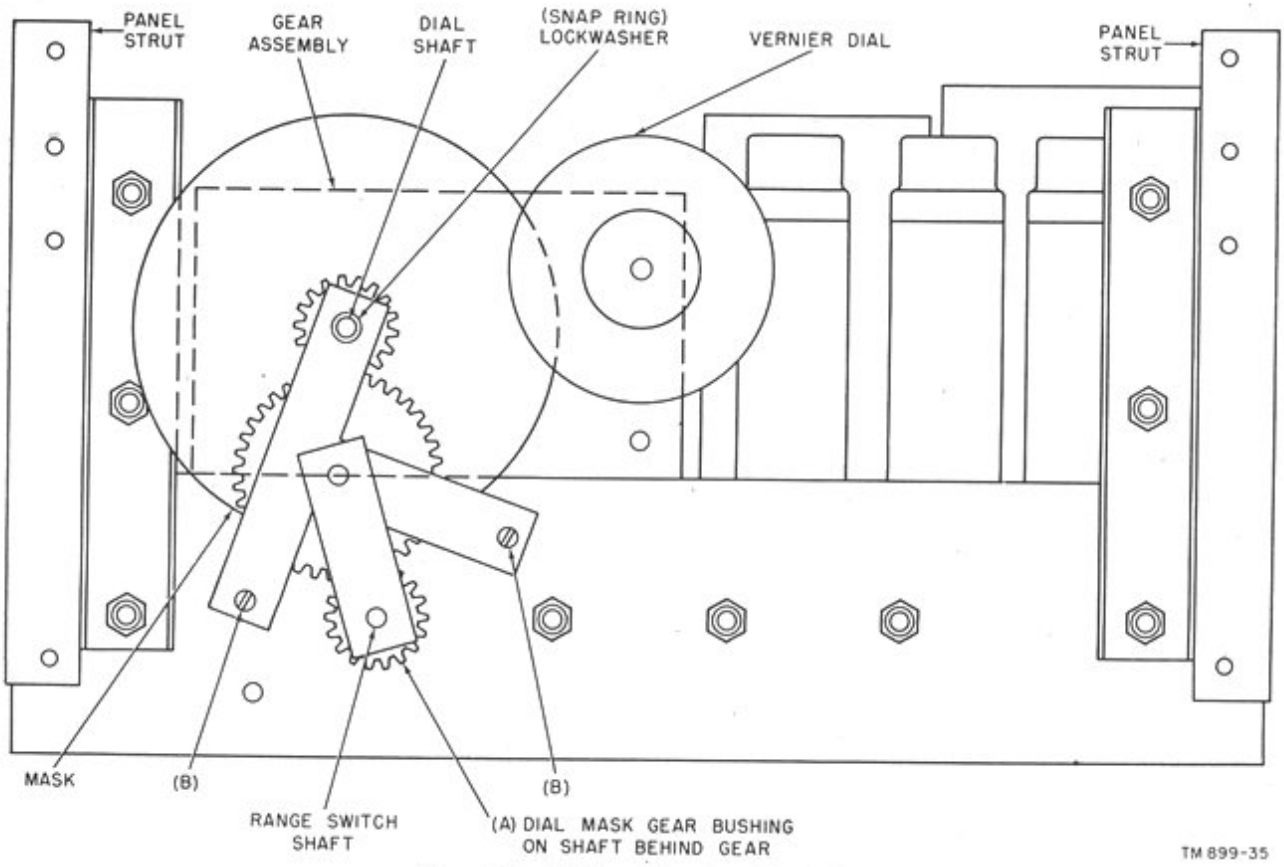

Figure 34. Dial mask location, front view.

(4) Slip the mask assembly on the RANGE switch shaft first and move the gear at the bottom back and forth until the upper bushing is lined up with the dial shaft. Push the assembly gently in place and replace the snap ring in the slot at the end of the dial shaft. Install the two screws (B) that hold the assembly to the chassis and tighten until the assembly is no longer shaky but so that the screws can be moved in their slots with a little force. Before finally tightening the assembly in place, move the mask assembly bracket back and forth in its slots until the dial shaft runs completely free. Any binding at this point will result in the slipping of the tuning assembly and will require the disassembly of the panel to remake the adjustment. Do *not* tighten the gear sleeve at this time. Lubricate all moving parts as indicated in figure 12.

(5) Replace the panel and knobs, reversing the disassembly procedure given in *a* (1) through (6) above.

(6) Set the RANGE switch to the position noted in accordance with instructions at the beginning of this paragraph. Observe the mask through the main tuning dial window and revolve the mask until the proper band slot and indication is exposed. When it has been accurately centered, tighten the gear sleeve (A) (figs. 32 and 34).

(7) Turn the TUNING CONTROL until the main ganged tuning capacitors are fully closed. Turn the main tuning dial disk on its shaft until the hairline at the low end of the dial is alined with the dial indicator plate hairline, and set the shaft screw lightly. Turn the vernier dial disk on its shaft until the 0 mark is under the vernier indicating hairline, and set that dial lightly also. When the two dials are set at the above positions, they are mated for logging as set at the factory. Exact calibration may be achieved by tuning a previously logged station; this should appear quite near the original position. Release the screws and reset the two dials for exact logging. The receiver should now track properly on the dials, provided the stations were logged when the receiver was properly alined.

(8) Reattach the dial lamp sockets as before removal.

66. Refinishing

Instructions for refinishing badly marred cabinets are given in TM 9-2851.

Section IV. ALINEMENT PROCEDURES

67. Test Equipment Required for Alinement

a. General. Alinement points referred to in this section are located on the top and bottom of the receiver chassis (fig. 35).

b. Signal Generator. The signal generator should be an accurately calibrated instrument capable of producing f-m (frequency-modulated) signals at 455 kc with a sweep range of at least 10 kc. The generator must also have provisions for producing a-m signals from 535 kc to 32 mc. It should have an output of approximately 100 microvolts and an output impedance of approximately 100 ohms for best results for alining the r-f amplifier and h-f oscillator circuits. For i-f alinement these values are not critical. Accurate frequency calibration of the sweep generator is of great importance since any variation of the generator will result in a corresponding misalinement of the receiver circuits. Signal Generator TS-465/U is suitable for this purpose.

c. Oscilloscope. An oscilloscope having a vertical amplifier with a uniform response to at least 600 kc is required. Oscilloscope BC-1060 or equivalent is suitable for this purpose.

d. Vacuum-Tube Voltmeter. A vacuum-tube voltmeter with flat response in the audio range, with a-c, d-c, and a-f scales covering the 0-5/10/100 ranges, is required. Electronic Multimeter TS-505/U or an equivalent meter is suitable for this purpose.

e. Alinement Tools. A suitable alinement tool is supplied with the receiver and is mounted with clips inside the large r-f unit cover. This tool is for the adjustment of all r-f and i-f coils.

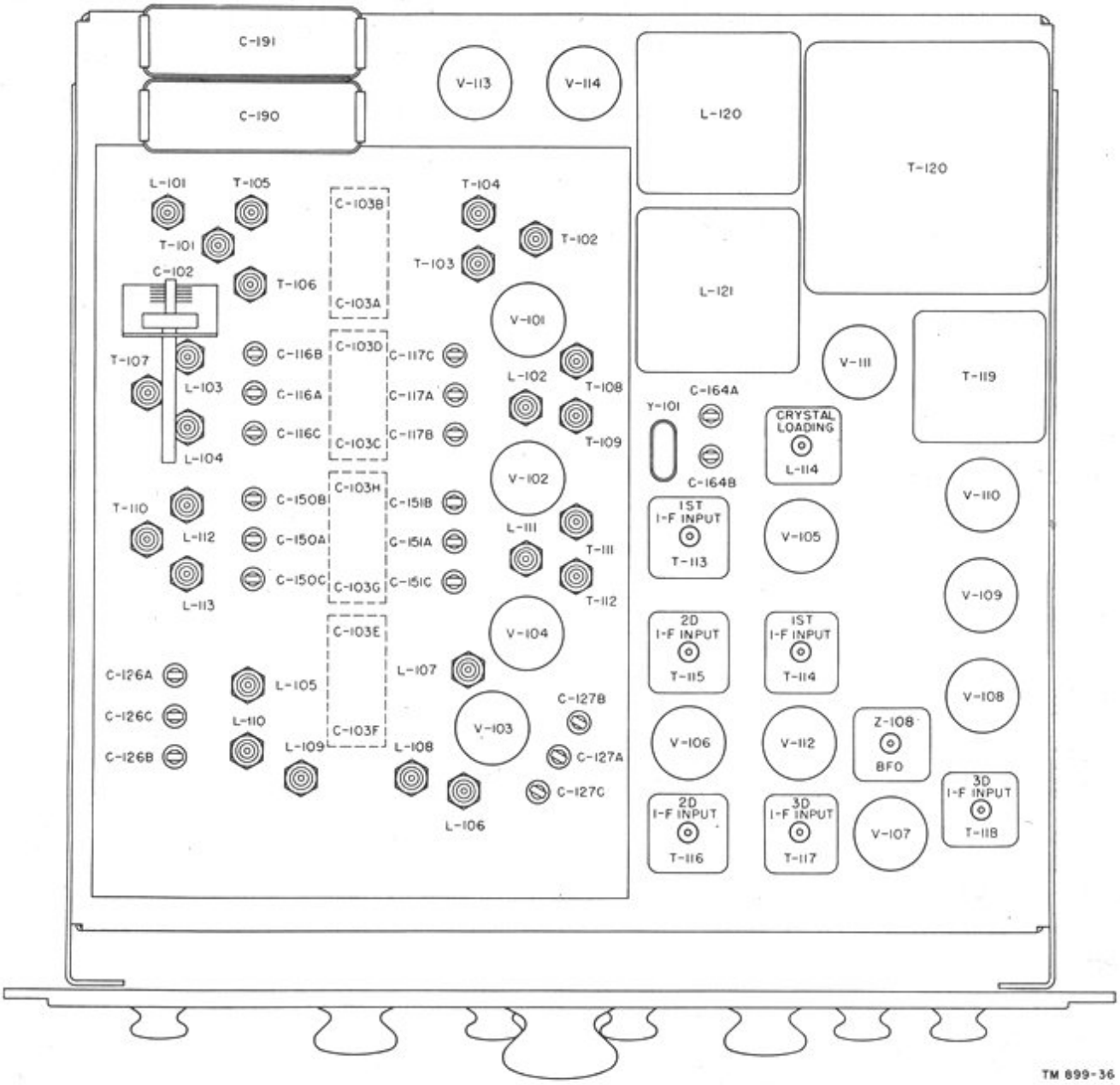

Figure 35. Receiver alinement points.

68. I-f Amplifier Alinement Procedure

a. Signal Generator Calibration. Before attempting to aline the i-f stages of the receiver, it will be necessary to calibrate the dial of the signal generator. This may be accomplished in the following manner:

(1) Turn the power-transmit-receive switch, S–104, to REC MOD, turn the off-on switch of the sweep generator to on, and allow the equipment to warm up for about an hour before beginning adjustments.

(2) Place SELECTIVITY switch S–102 in position 3.

(3) Connect the output of the sweep generator between terminal A of Z–101 and receiver ground.

(4) Connect the sweep frequency output terminals of the sweep generator to the horizontal amplifier terminals of the oscilloscope.

(5) Connect the high lead of the vertical amplifier of the oscilloscope to pin 4 of tube V–105, and the low lead to receiver ground.

(6) Adjust the signal generator to provide an f-m carrier signal of approximately 455 kc with a bandwidth of zero.

(7) Vary the main tuning dial of the signal generator to obtain the maximum vertical trace on the oscilloscope. The sweep generator is now set to exactly 455 kc. Do not touch the main tuning dial of the generator for the remainder of the alinement procedure.

b. Control Settings. (1) Alinement of the i-f stages may be accomplished by following the procedures given in *c*, *d*, *e*, and *f* below. Set the panel controls as follows:

Control	Setting
Power-transmit-receive	REC MOD.
RF GAIN	Midposition.
SELECTIVITY	2.
DIVERSITY IF GAIN	Midposition.
Noise limiter-avc	AVC.

(2) The settings of the remaining controls do not affect these adjustments as long as care is taken to set the TUNING CONTROL so that a powerful station is not tuned in.

c. Third I-F Amplifier Alinement. The third i-f stage is not affected by the SELECTIVITY switch setting. It is a single peaked, sharply tuned stage with a band width of approximately 10 kc at 50 percent of peak voltage. The stage gain is approximately 100. Use the following procedure to obtain the frequency response curve shown in figure 36:

(1) Connect the output of the sweep generator between pin 4 of tube V–107 and receiver ground.

(2) Tie the sweep frequency output terminals of the sweep generator to the horizontal amplifier terminals of the oscilloscope.

(3) Connect the high lead of the vertical amplifier of the oscilloscope to terminal B of Z–107 and the low lead of the vertical amplifier to terminal C of the same network.

(4) Without touching the setting of the main tuning dial of the sweep generator, adjust the sweep generator to yield a 30-kc sweep.

(5) Adjust the attenuator of the signal generator to yield a convenient indication on the scope.

Note. Before attempting to adjust the tuning slugs in the i-f cans, loosen the locknuts. When adjustments are completed, retighten the locknuts.

(6) Adjust the slug in the primary coil of transformer T–118 (fig. 35) (located at the top of Z–107) and the slug in the secondary of the same transformer (located at the bottom of Z–107), using the alinement tool supplied with the receiver.

(7) Turn the slugs only slightly with each adjustment, attempting to increase the scope deflection with each adjustment. Because of the coupling between the primary and secondary coils, it is impossible to adjust one coil over a wide range without affecting the other coil. As a result, turning one slug without the other may result in an increased output although the resonant point is not being approached.

(8) When the stage is alined, the curve shown in figure 36 should be obtained. Note that the peak occurs at the center of the curve. An asymmetrical pattern with the peak off toward one side or the other indicates that the tank circuit is tuned to a frequency other than 455 kc.

d. Second I-F Amplifier Alinement. For the alinement of this stage, the signal from the

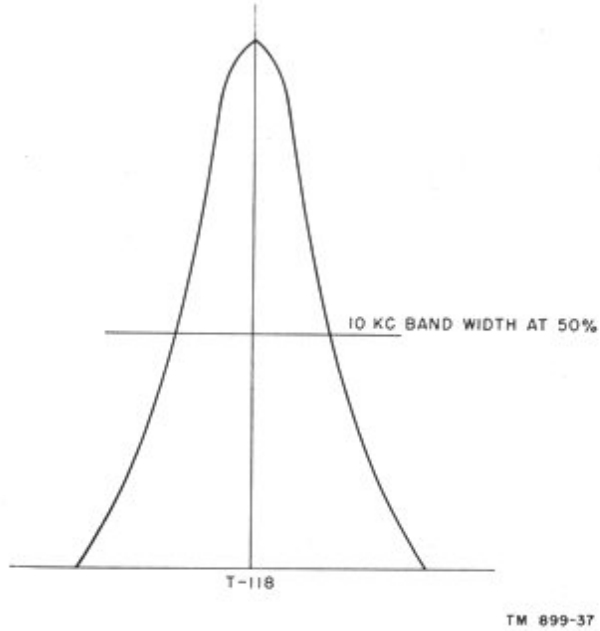

Figure 36. Third i-f stage, selectivity curve.

sweep generator is introduced between pin 4 of tube V–106 and ground. All other connections are left as described in *c* above. The SELECTIVITY switch setting affects the circuits of this stage by varying the coupling between the transformers.

(1) With the SELECTIVITY switch in position 2 adjust the tuning slugs in transformers T–116 and T–117 for resonance. Follow the procedure outlined in *c* above.

(2) Check the circuits for symmetrical expansion by turning the SELECTIVITY switch to position 1.

(3) The curves shown in figure 37 should be obtained on the oscilloscope when the stages have been properly alined.

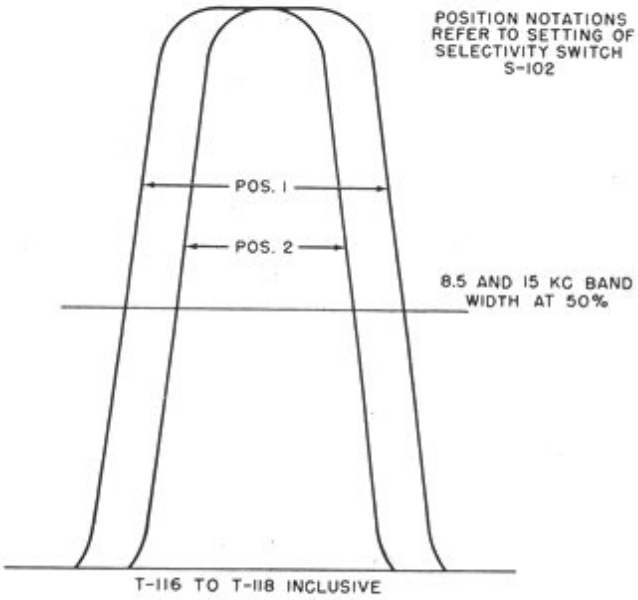

TM 899-38

Figure 37. Second and third i-f stages, selectivity curves.

e. First I-F Amplifier Alinement. With the signal fed into pin 4 of tube V–105 and all other connections left as described in *c* above, the slugs in transformers T–114 and T–115 are adjusted as described in *c* above. The adjustments made should result in an output on the oscilloscope as shown in figure 38. These curves show the over-all selectivity of the three stages and are the combined curves of the output of the three i-f stages (transformers T–114 through T–118). The curves are double-peaked with the SELECTIVITY switch in position 1 and flat-topped with the switch in position 2. The band width will be somewhat

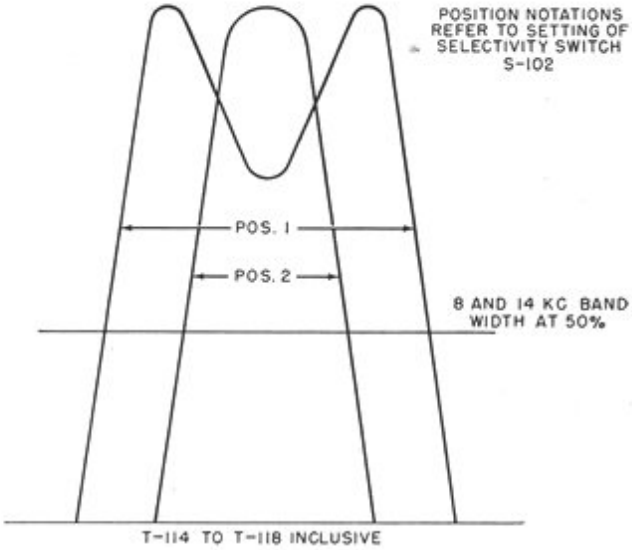

TM 899-39

Figure 38. Combined first, second, and third i-f stages, selectivity curves.

narrower than for the second and third i-f stages alone.

f. First I-F Input Circuit Alinement. Alinement of this stage is accomplished with the output of the sweep generator introduced on pin 8 of tube V–104 and all other connections left as described in *c* above. Transformer T–113, like transformer T–118, is sharply peaked and not affected by the SELECTIVITY switch setting. This stage will transform the double-peaked curves of transformers T–114 through T–118 to a flat-topped curve as shown in figure 39. Use the following procedure for alinement:

(1) Set CRYSTAL PHASING control (C–147) at approximately its midposition.

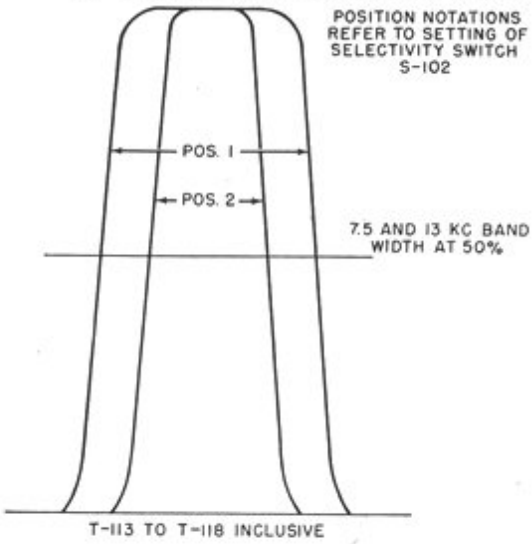

TM 899-40

Figure 39. Combined i-f stages, over-all selectivity curves.

(2) Adjust the tuning slugs in transformer T–113 for maximum deflection on the scope with the SELECTIVITY switch in position 2.

(3) Switch to position 1 to check the curves for symmetrical expansion.

g. Crystal Phasing Control Adjustment.

(1) All connections remain as described in *f* above.

(2) Adjust the CRYSTAL PHASING control to obtain the narrowest band width as shown on the oscilloscope.

(3) Loosen the control knob on the front panel and reset the pointer to its mid-position.

h. Crystal Load Circuit Adjustment.

(1) All connections remain as described in *f* above.

(2) Turn the SELECTIVITY switch to position 3.

(3) Adjust the tuning slug in coil L–114 to obtain a symmetrical round-topped curve.

(4) Place the SELECTIVITY switch in position 4.

(5) Adjust trimmer capacitor C–164B to increase the symmetry of the response curve.

(6) Place the SELECTIVITY switch in position 5.

(7) Adjust trimmer capacitor C–164A to symmetrize the response curve further. The adjustments of coil L–114 and capacitor C–164A and C–164B are very critical and must be made very carefully.

i. Alternate Alinement Methods. The following methods may be used for alinement of the individual stages. The selectivity curves for the individual and combined stages are shown in figure 40.

(1) An a-m signal generator will suffice for this method. It will be necessary to calibrate the dial of the a-m signal generator. This may be accomplished as follows:

(*a*) Set the panel controls as described in *b* above.

(*b*) Turn the SELECTIVITY switch to position 3.

(*c*) Tie the output of the signal generator between pin 8 of tube V–104 and ground.

(*d*) Place a VTVM (vacuum-tube voltmeter) between pin 4 of V–105 and ground.

(*e*) Rotate the signal generator about the 455-kc reading until the VTVM shows a reading.

(*f*) Adjust the output of the signal generator so that a reading of about ¼ scale is obtained on the meter.

(*g*) Rotate the signal generator dial very slowly in order to find the resonant frequency of the crystal. At that point the output indication will show a marked increase.

(*h*) The tuning dial of the signal generator should be left at this setting during all adjustments affecting the i-f stages.

(2) A VTVM and a manually operated signal generator may be used to take individual i-f curves. Connect the generator to the grid of the tube ahead of the transformer to be alined. The VTVM must be connected across a plate load resistor of the tube that follows the stage to be alined. With this method, the transformer under test may be alined and the connections then shifted to another stage. For alining the third i-f transformer, T–118, the VTVM should be loosely coupled to the diode, V–108, through a 0.1-uuf capacitor in series with the VTVM lead. Alternately the VTVM may be connected from the high side of NOISE LIMITER control resistor R–135 (the diode load) to ground (terminal 4 or 5 to terminal 3 on E–102). Transformers T–118 and T–113 are not affected by the SELECTIVITY switch, and, because they are sharply peaked, they are easily alined with a VTVM. Transformers T–114 through T–117 are in double-peaked circuits and are not so easily alined. THE VTVM is to be connected for output readings as given in the table below:

Transformer	Connection
T–113	Across R–123.
T–114 and T–115	Across R–127.
T–116 and T–117	Across R–131.
T–118	Across R–135.

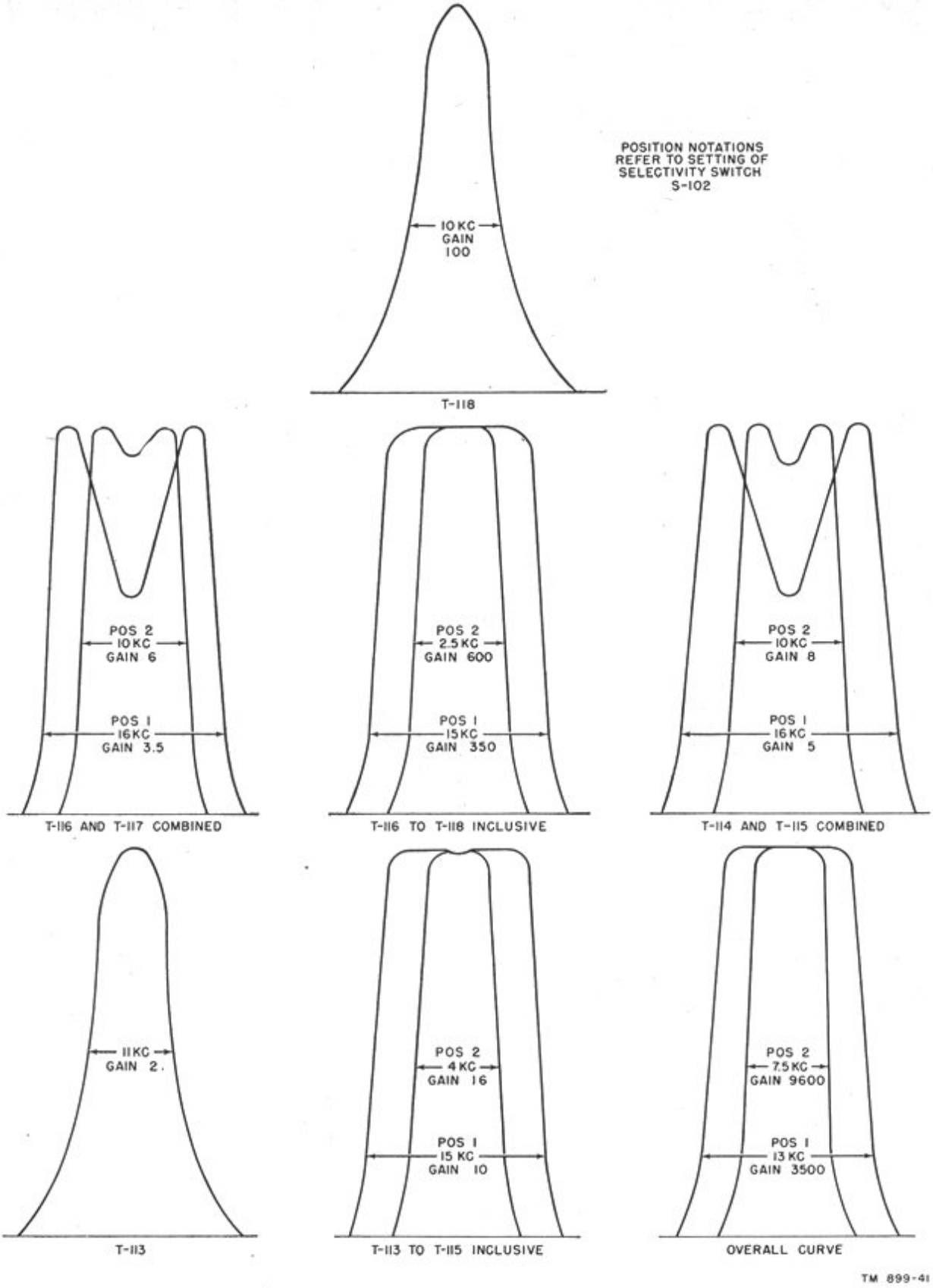

Figure 40. Individual i-f stage selectivity curves.

The best method for alinement of transformers T–114 through T–117 is as follows:

(*a*) Set the signal generator to 455 kc.

(*b*) Set the SELECTIVITY switch to position 2.

(*c*) Adjust the trimmers of the four transformers for maximum output. This will give only an approximate alinement.

(*d*) Reset the SELECTIVITY switch to position 1. A change of the generator frequency will now give a double peak on the output indicator.

(*e*) Since the properly alined peak separation is about 12 kc, the generator frequency should be set to 6 kc above or below resonance (461 or 449 kc) and the four circuits should again be adjusted for maximum output for either peak.

(*f*) Check the amplitude of the other peak and, if it is not the same, adjust until it is equal.

(*g*) This method, if carefully performed, will result in very symmetrical alinement, since the peaks of a double-peaked curve are points of maximum gain.

69. R-f Amplifier Alinement

a. General. R-f amplifier alinement requires a signal generator capable of furnishing a modulated r-f signal with a frequency range of 535 kc to 32 mc and an output meter. Signal Generator TS–465/U and Output Meter TS–585/U are adequate. It is desirable to use a loudspeaker in conjunction with the output meter. The loudspeaker should have a voice coil of 2.5 to 3.2 ohms impedance. The meter is to be connected across the voice coil.

(1) If a speaker is not used, connect the output meter to terminals 1 and 2 on terminal board E–103 (600-ohm speaker terminals) (fig. 9).

(2) The signal generator should be adjusted to give the least signal which will produce usable readings on the output indicator.

(3) On the higher frequencies be sure that the oscillator is alined for tracking on the h-f side of the signal.

(4) Use the table in *b* below for all alinement operations. Follow the steps in the order given.

(5) The signal generator should be set for a modulated output and the signal fed to the A and G posts at the rear of the chassis.

(6) Turn the AF GAIN control to full clockwise position.

(7) Turn the RF GAIN control to full clockwise position.

(8) Set the noise limiter-avc control at MAN.

(9) Set the SELECTIVITY switch at position 2.

(10) Turn the power-transmit-receive switch to REC MOD.

(11) See the table in *b* below for RANGE switch settings.

(12) All r-f alinement adjustments are located on the top of the chassis (fig. 35).

(13) The oscillator should track above the signal frequency on all bands. If more than one peak is obtainable on the oscillator, use the higher frequency peak.

b. Alinement Procedure. The following table lists the r-f alinement procedures in the order in which the operations are to be performed. Note that band 1 requires a 200-uuf capacitor across the antenna input during alinement.

Operation No.	Range switch position	Position of dial	Generator freq (kc)	Position of antenna trimmer	Trimmer adjusted for max peak output	Trimmer function
1	1	Extreme low end	535		L–105	Low end, oscillator.
2	1	Extreme high end	1, 600		C–126A	High end, oscillator.

3 Repeat 1 and 2 until extreme end frequencies are as indicated.

Operation No.	Range switch position	Position of dial	Generator freq (kc)	Position of antenna trimmer	Trimmer adjusted for max peak output	Trimmer function
4	1	1,500 kc	1, 500	Max output	C–116A, C–150A	1st and 2d r-f.
5	1	600 kc	600	Untouched	T–101 secondary T–107 secondary T–110 secondary	Antenna and 1st and 2d r-f.
6	Repeat 4 and 5 until circuits remain in alinement over the band.					
7	2	Extreme low end	1, 570		L–106	Low end, oscillator.
8	2	Extreme high end	4, 550		C–127A	High end, oscillator.
9	Repeat 7 and 8 until extreme end frequencies are as indicated.					
10	2	4,300 kc	4, 300	Max output	C–117A, C–151A	1st and 2d r-f.
11	2	1,700 kc	1, 700	Untouched	T–102 secondary T–108 secondary T–111 secondary	Antenna and 1st and 2d r-f.
12	Repeat 10 and 11 until circuits remain in alinement over the band.					
13	3	Extreme low end	4, 450		L–107	Low end, oscillator.
14	3	Extreme high end	12, 150		C–127B	High end, oscillator.
15	Repeat 13 and 14 until extreme end frequencies are as indicated.					
16	3	11,500 kc	11, 500	Max output	C–117C, C–151B	1st and 2d r-f.
17	3	4,600 kc	4, 600	Untouched	T–103 secondary T–109 secondary T–112 secondary	Antenna and 1st and 2d r-f.
18	Repeat 16 and 17 until circuits remain in alinement over the band.					
*19	4	Extreme low end	11, 900		L–108	Low end, oscillator.
20	4	Extreme high end	16, 600		C–127C	High end, oscillator.
21	Repeat 19 and 20 until extreme end frequencies are as indicated.					
22	4	16,400 kc	16, 400	Max output	C–117B, C–151C	1st and 2d r-f.
23	4	12,100 kc	12, 100	Untouched	T–104 secondary L–102, L–111.	Antenna and 1st and 2d r-f.
24	Repeat 22 and 23 until circuits remain in alinement over the band.					
*25	5	Extreme low end	16, 100		L–109	Low end, oscillator.
26	5	Extreme high end	22, 700		C–126B	High end, oscillator.
27	Repeat 25 and 26 until extreme end frequencies are as listed.					

See footnotes at end of table.

Operation No.	Range switch position	Position of dial	Generator freq (kc)	Position of antenna trimmer	Trimmer adjusted for max peak output	Trimmer function
28	5	22,500 kc	22, 500	Max output	C–116B, C–150B	1st and 2d r-f.
29	5	16,400 kc	16, 400	Untouched	T–105 secondary L–103, L–112.	Antenna and 1st and 2d r-f.
30	Repeat 28 and 29 until circuits remain in alinement over the band.					
*31	6	Extreme low end	22, 000		L–110	Low end, oscillator.
32	6	Extreme high end	32, 000		C–126C	High end, oscillator.
33	Repeat 31 and 32 until extreme end frequencies are as indicated.					
34	6	31,500 kc	31, 500	Max output	C–116C, C–150C	1st and 2d r-f.
35	6	22,500 kc	22, 500	Untouched	T–106 secondary L–104, L–113.	Antenna and 1st and 2d r-f.
36	Repeat 34 and 35 until circuits remain in alinement over the band.					

**Note.* On all coils except L–108, L–109, and L–110, bands 4, 5, and 6 oscillator coils, respectively, turning the core clockwise increases the inductance. On these three coils, turning the core clockwise decreases the inductance.

c. Wavetrap Adjustment. A wavetrap is connected in parallel across the antenna input terminals to increase the rejection of the i-f signal frequencies.

(1) Set the RANGE control at band 1.

(2) Feed a modulated i-f signal (455 kc) into the antenna input terminals.

(3) Adjust the wavetrap trimmer on coil L–101 (fig. 35) for minimum output on the output meter.

(4) The antenna circuit of band 1 is affected by this adjustment, and T–101 will require realinement after the wavetrap has been adjusted.

d. Beat-Frequency Oscillator Adjustment.

(1) Set the power-transmit-receive switch at REC MOD and the SELECTIVITY switch at position 2.

(2) Supply a modulated r-f signal to the receiver input terminals (A and center terminal on E–101) and rock the tuning dial of the receiver until the signal is tuned to exact resonance.

(3) Remove the modulation from the output of the signal generator and turn on the bfo by setting the power-transmit-receive switch in the REC CW position.

(4) Rotate the pointer of the BFO ADJ control until the pointer on the knob is straight up.

(5) Adjust the tuning slug of coil L–119, if necessary, to produce a zero beat (no audio output from speaker). Turning the BFO ADJ control in either direction from its midpoint setting should then result in an audio tone output from the speaker.

Section V. FINAL TESTING

70. General

This section is intended as a guide to be used in determining the quality of a repaired Radio Receiver R–320/FRC. The minimum test requirements outlined in paragraph 72 may be performed by maintenance personnel with adequate test equipment and the necessary skills. Repaired equipment meeting these minimum requirements will furnish uniformly satisfactory operation.

71. Test Equipment Required for Final Testing

The instruments needed for testing the repaired equipment are listed in the following table:

Quantity	Equipment
1	Signal generator with metered output covering the r-f range of frequencies. The generator should have provision for an independent a-f output at audio frequencies covering a 1,000-cycle note. If the generator does not possess independent a-f capabilities, a separate a-f generator may be used to furnish a-f signals. Signal Generator TS-465/U is suitable.
1	Output meter equipped with Plug PL-55, which will allow the meter to be plugged into the PHONES jack on the front panel. Output Meter TS-585/U is suitable.
1	Electronic voltmeter. Electronic Multimeter TS-505/U is adequate.
1	Dummy antenna, 200-uuf capacitor for band 1.
1	Dummy antenna, 200-ohm noninductive resistor for bands 2, 3, 4, 5, and 6.

72. Tests

a. General. The block diagram in figure 41 covers arrangements for final testing of the receiver. The following control settings or conditions apply to all tests except where noted:

Control or condition	Setting
ANT ADJ	Adjust to optimum setting at one frequency on each band (nominally high end).
SELECTIVITY switch	Position 2.
Power-transmit-receive switch	REC MOD position.
RF GAIN control	Maximum (clockwise).
AF GAIN control	Maximum (clockwise).
Noise limiter-avc switch	MAN position.
HF TONE control	Maximum (clockwise).
TUNING CONTROL	Set as required.
Relative humidity	Below 50 percent.
Ambient temperature	Maximum (clockwise).
DIVERSITY IF GAIN control.	Maximum (clockwise).

b. I-F Selectivity (fig. 41). Connect a signal generator to pin 8 of tube V-104 with a 0.01-uf capacitor in series with the generator output lead as shown, and tune the generator to the intermediate frequency (455 kc).

(1) Tune the generator for maximum output on the output meter. This will establish close resonance with the tuned i-f circuits.

(2) Attenuate the signal strength of the generator output until the VTVM connected across the diode load reads 1.9 volts.

(3) Note the generator output reading and adjust for double the output noted.

(4) Detune the generator above and below the intermediate frequency (455 kc) and watch the VTVM as the voltage drops. When the reading is 1.9 volts, note the amount detuned and establish the bandwidth, which should be as given in the table below.

SELECTIVITY switch position	Bandwidth in kc with signal 2 times up and generator detuned to 1.9-volt output		
	Nominal	Narrowest	Widest
1	14. 09	11. 0	16. 0
2	7. 09	6. 0	9. 5
3	3. 055	2. 2	5. 5
4	1. 426	0. 8	1. 9
5	0. 576	0. 2	0. 6

c. BFO Operation. With the bfo turned on, zero-beat should occur on a c-w signal when the BFO ADJ control is vertical.

d. Diversity I-F Gain Range. With the output meter connected as shown in figure 41, complete rotation of the DIVERSITY IF GAIN control should show at least 40 db (decibels) gain or loss.

e. Sensitivity. Use the control settings given in *a* above, and make changes as directed below:

(1) Set noise limiter-avc switch to AVC.

(2) Adjust the AF GAIN control to give a 50-mw (milliwatt) signal-plus-noise output on the output meter, with a 400-cycle, 30-percent modulated, 1,000-kc signal introduced at the antenna (fig. 41, general test set-up).

(3) The output across the diode load should be not less than 4 volts dc.

(4) With the inputs at the frequencies and on the bands given below, a 6-db or

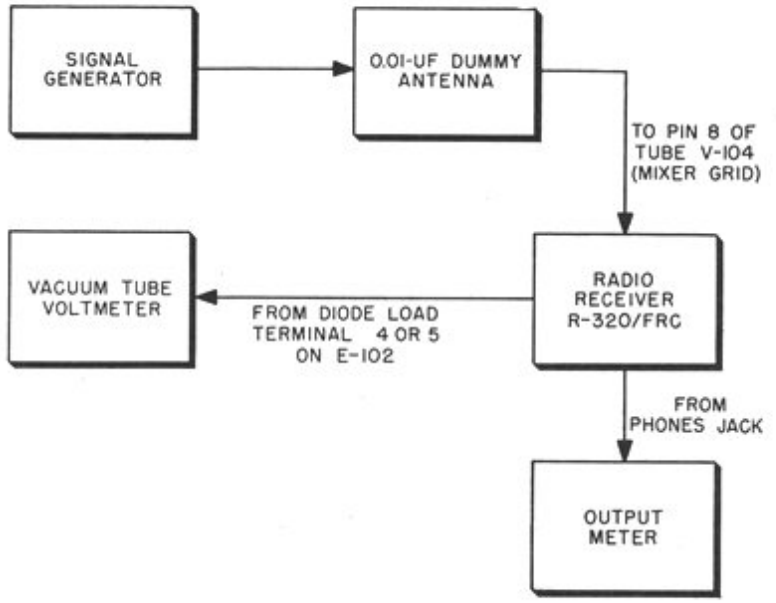

SELECTIVITY TEST SETUP

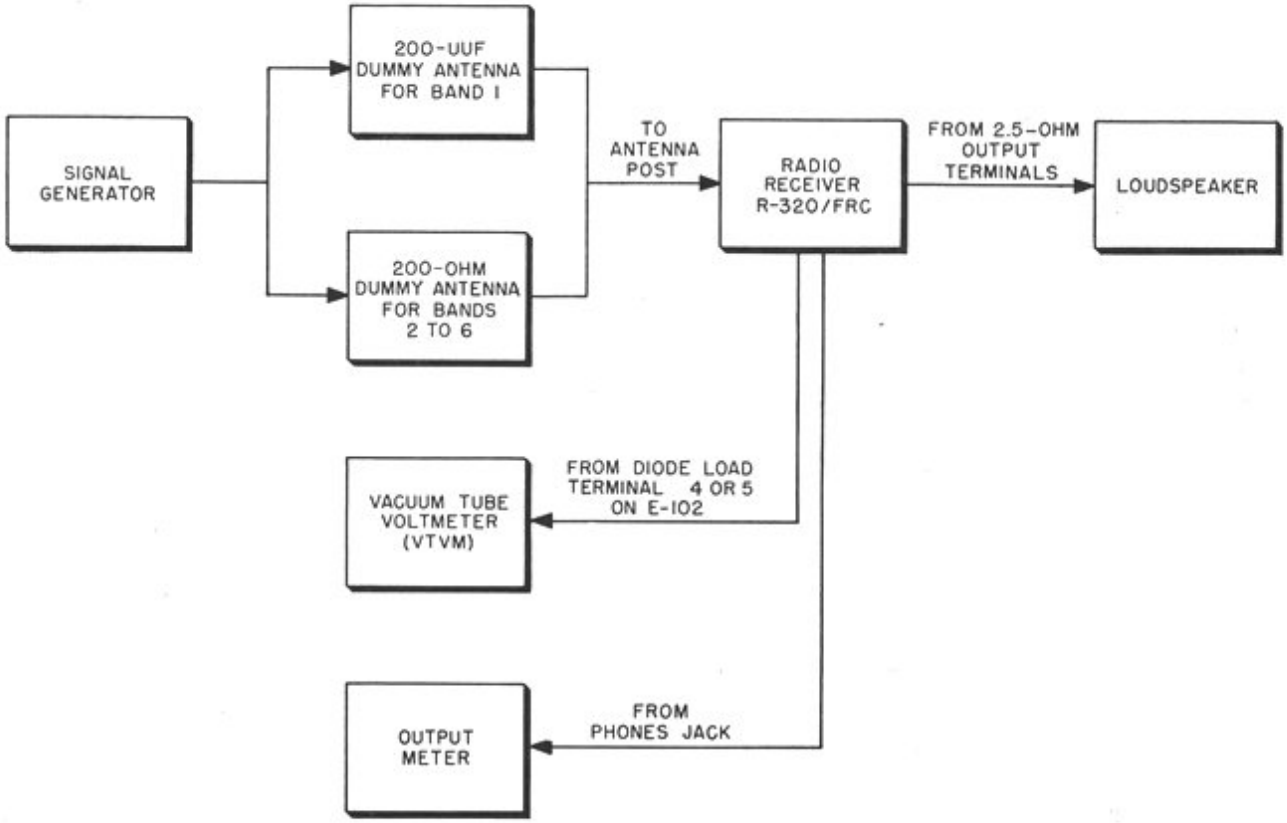

GENERAL TEST SETUP

TM 899-42

Figure 41. Receiver final testing arrangement, block diagram.

12.5-mw drop should occur when the modulation is turned off:

Input (microvolts)	Band	Generator and receiver frequency (kc)
3	1	600
4	1	1, 000
6	1	1, 500
4	2	1, 700
3	2	3, 000
3	2	4, 300
4	3	4, 600
4	3	8, 000
4	3	11, 500
1. 9	4	12, 100
1. 8	4	16, 400
2. 9	5	16, 400
2. 8	5	22, 500
2. 9	6	22, 500
2. 1	6	28, 000

f. Image Ratio. This test is performed at the high end of bands 2, 3, 4, 5, and 6 only. Use control settings as given for sensitivity measurements (*e* above).

(1) Tune in a signal at each of the frequencies (in turn) listed in the chart below. With the receiver correctly tuned and the generator output adjusted for a 50-mw receiver output detune the generator 910 kc above the receiver setting.

Band	Frequency (kc)	Ratio (minimum)
2	4, 300	5, 000 to 1
3	4, 600	30, 000 to 1
3	11, 500	1, 200 to 1
4	12, 000	2, 500 to 1
4	16, 400	1, 000 to 1
5	16, 400	650 to 1
5	22, 500	200 to 1
6	22, 500	200 to 1
6	28, 000	100 to 1

(2) Increase the output of the generator to again obtain a 50-mw receiver output. The required minimum ratio between the new output settings of the generator and the original settings are listed in the table in (1) above.

g. Hum Level. Use standard control settings as given in *a* above with no input signal, and make changes as directed below.

(1) RF GAIN control at minimum.

(2) No position of the noise limiter-avc switch should yield more than 0.025 mw output.

h. Tone Control. Use standard test set-up for band 1 and inject a 1,000-cycle, 30-percent modulated, 600-kc signal of such magnitude as to result in a power output of 500 mw with the AF GAIN control at approximately midposition. Rotation of the TONE CONTROL in a counterclockwise direction should attenuate the output signal not less than 4 db.

i. Noise Limiter. Use standard control settings and test set-up as described in *h* above.

(1) Adjust the AF GAIN control for 500 mw output.

(2) Set noise limiter-avc switch to MAN NL or AVC NL position.

(3) Rotation of the NOISE LIMITER control should affect the tone quality of the signal.

j. Avc Action. Use standard control settings and standard test set-up as described in *h* above.

(1) Inject a 600-kc, 400-cycle, 30-percent modulated signal for band 1.

(2) Increase signal output from 1 to 300,000 microvolts (109.5 db).

(3) Increase in the voltage across the diode load should be not more than 10 db (3.2 times).

k. Line Voltage Selector Switch. Apply 110-volt, a-c power to the receiver. Rotation of the line voltage selector switch (S–105) from 110 to 240 should dim the pilot lamps with each advance in setting.

CHAPTER 6

SHIPMENT AND LIMITED STORAGE AND DEMOLITION TO PREVENT ENEMY USE

Section I. SHIPMENT AND LIMITED STORAGE

73. Disassembly

The circumstances involved in shipment and storage vary, and therefore no definite procedure can be given. The following instructions are intended as a guide for preparing the receiver for shipment and storage:

a. Remove all outside leads such as antennas or ground wires.

b. Disconnect all external cabling if using the receiver in diversity.

c. Remove all headphone and/or speaker connections.

74. Repacking for Shipment or Limited Storage

a. The exact procedure in repacking for shipment or limited storage depends on the materials available and the conditions under which the equipment is to be shipped or stored. Refer to paragraph 10 and follow in reverse order the instructions given.

b. Whenever practicable, place a dehydrating agent such as silica gel inside the container. Seal the seams of the paper barrier with a waterproof sealing compound or tape. Pack the sealed receiver in a wooden case provided with at least 3 inches of excelsior padding between the barrier and the wooden case.

Section II. DEMOLITION OF MATÉRIEL TO PREVENT ENEMY USE

75. General

The demolition procedures outlined in paragraph 76 will be used to prevent the enemy from using or salvaging this equipment. Demolition of the equipment will be accomplished *only* upon order of the commander.

76. Methods of Destruction

a. Smash. Smash the crystal, controls, tubes, coils, switches, capacitors, transformers, and headsets, using sledges, axes, handaxes, pickaxes, hammers, crowbars, or heavy tools.

b. Cut. Cut cords, headsets, and wiring, using axes, handaxes, or machetes.

c. Burn. Burn cords, resistors, capacitors, coils, wiring, and technical manuals, using gasoline, kerosene, oil, flame throwers, or incendiary grenades.

d. Bend. Bend panels, cabinet, and chassis.

e. Explosives. If explosives are necessary, use firearms, grenades, or TNT.

f. Disposal. Bury or scatter the destroyed parts in slit trenches, fox holes, or other holes, or throw them into streams.

g. Destroy everything.

APPENDIX I

REFERENCES

Note. For availability of items listed, check FM 21–6 and SR 310–20–6. Check Department of the Army Supply Catalog SIG 1 for Signal Corps supply catalog pamphlets.

1. Army Regulations

AR 380–5	Safeguarding Military Information.

2. Supply Publications

SIG 1	Introduction and Index.
SB 11–17	Electron Tube Supply and Reference Data.
SB 11–76	Signal Corps Kit and Materials for Moisture- and Fungi-Resistant Treatment.

3. Technical Manuals on Auxiliary Equipment and Test Equipment

TM 11–307	Signal Generators I–72–G, H, J, and K.
TM 11–2524	Oscillator I–151A.
TM 11–2526	Oscilloscope BC–1060–A.
TM 11–2627	Tube Tester I–177.

4. Painting, Preserving, and Lubrication

TB SIG 13	Moistureproofing and Fungiproofing Signal Corps Equipment.
TB SIG 69	Lubrication of Ground Signal Equipment.
TM 9–2851	Painting Instructions for Field Use.

5. Camouflage

FM 5–20	Camouflage, Basic Principles.

6. Decontamination

TM 3–220	Decontamination.

7. Demolition

FM 5–25	Explosives and Demolitions.

8. Packaging and Packing Instructions

a. Joint Army-Navy Packaging Specifications.

JAN–D–169	Desiccants, Activated.
JAN–P–100	General Specifications.
JAN–P–106	Boxes, Wood, Nailed.
JAN–P–116	Preservation, Methods of.
JAN–P–125	Barrier Material, Waterproof.
JAN–P–131	Barrier Material, Moisture-Vaporproof, Flexible.

b. U. S. Army Specification.

100–2E	Marking Shipments by Contractors (and Signal Corps Supplement thereto).

c. Signal Corps Instructions.

720–7	Standard Pack.
726–15	Interior Marking.

9. Other Publications

FM 24–18	Radio Communication.
TB SIG 25	Preventive Maintenance of Power Cords.
TB SIG 66	Winter Maintenance of Signal Equipment.
TB SIG 72	Tropical Maintenance of Ground Signal Equipment.
TB SIG 75	Desert Maintenance of Ground Signal Equipment.
TB SIG 123	Preventive Maintenance Practices for Ground Signal Equipment.
TB SIG 178	Preventive Maintenance Guide for Radio Communication Equipment.
TM 1–455	Electrical Fundamentals.
TM 11–455	Radio Fundamentals.
TM 11–483	Suppression of Radio Noises.
TM 11–880	Radio Receivers (RCA Models AR 88D and F).
TM 11–889A	Radio Receiver Assembly OA–58A/FRC.

TM 11-4000	Trouble Shooting and Repair of Radio Equipment.
TM 38-650	Basic Maintenance Manual.

10. Forms

NME Form 6	Report of Damaged or Improper Shipment.
DA AGO Form 468	Unsatisfactory Equipment Report.
AF Form 54	Unsatisfactory Report.

11. Abbreviations

a-c	alternating-current
a-f	audio-frequency
a-m	amplitude-modulated
avc	automatic volume control
bfo	beat-frequency oscillator
cps	cycles per second
c-w	continuous-wave
db	decibel
d-c	direct-current
FCC	Federal Communications Commission
f-m	frequency-modulated
h-f	high-frequency
i-f	intermediate-frequency
kc	kilocycle
l-f	low-frequency
mc	megacycle
mcw	modulated continuous waves
meg	megohm
mw	milliwatt
PM	preventive maintenance
r-f	radio-frequency
uf, mf	microfarad
uuf, mmf	micromicrofarad
VTVM	vacuum-tube voltmeter

12. Glossary

For an explanation of the terms used in this manual, refer to TM 11-455.

APPENDIX II

IDENTIFICATION TABLE OF PARTS

1. Requisitioning Parts

The fact that a part is listed in this manual is not sufficient basis for requisitioning the item. Requisitions must cite an authorized basis, such as T/O & E, T/A, T/BA, SIG 6, SIG 7 & 8, SIG 7–8–10, SIG 10, list of allowances of expendable material, or another authorized supply basis. For an index of available supply catalogs in the Signal portion of the Department of the Army Supply Catalog, see the latest issue of SIG 1, Introduction and Index.

2. Identification Table of Parts for Radio Receiver R–320/FRC

Ref symbol	Name of part and description	Function of part	Signal Corps stock No.
	RADIO RECEIVER R–320/FRC: AM and CW; for communication; 0.535 to 32 mc in 6 bands; input 110 to 165 and 190 to 260 v; 50 to 60 cyc; 100 w; rack mtd; 19″ lg x 10½″ wd x 19¼″ d o/a; 14 tube superheterodyne circuit; built-in BFO, crystal filter, variable selectivity and noise limiter; output impedance 2.5 ohms and 600 ohms, undistorted output 2.5 w; RCA model MI–17104D; RCA part/dwg #311034–1.	Radio receiver.	
W–101	CABLE ASSEMBLY, power: NT #CG 62424 (1 ft-2½″); UL type SJ; two #18 AWG stranded cond; rubber ins; 300 v working; all rubber; 13½″ lg excluding terminations; GE cat. # "Junior Plug" on one end, other end terminated in 2 leads ea 3½″ lg and ea stripped back ½″; GE 2 cond #18 SJ special all rubber cord w/Junior Plug; RCA part/dwg #811638–4.	A–c power cord.	
C–142	CAPACITOR, fixed: ceramic dielectric; JAN type CC30UJ070F; spec JAN–C–20; RCA part/dwg #722423–410.	H-f oscillator coupling	3D9007–13
C–175	CAPACITOR, fixed: ceramic dielectric; JAN type CC21UJ100F; spec JAN–C–20; RCA part/dwg #722408–413.	Bfo coupling.	
C–125, C–129, C–131	CAPACITOR, fixed: ceramic dielectric; JAN type CC30TJ120J; spec JAN–C–20; RCA part/dwg #722422–364.	C–125: Band 1 oscillator temperature compensating capacitor. C–129: Band 2 oscillator temperature compensating capacitor. C–131: Band 3 oscillator temperature compensating capacitor.	
C–110, C–152	CAPACITOR, fixed: ceramic dielectric; JAN type CC30UJ150K; spec JAN–C–20; RCA part/dwg #722423–415.	C–110: Band 6 antenna secondary tuning capacitor. C–152: Band 4 second r-f coupling.	
C–192	CAPACITOR, fixed: mica; JAN type CM20B150K; spec JAN–C–5; RCA part/dwg #722001–554.	Band 1 occillator padding.	
C–106	CAPACITOR, fixed: ceramic dielectric; JAN type CC30UJ180K; spec JAN–C–20; RCA part/dwg #722423–416.	Band 3 antenna secondary tuning.	

Ref symbol	Name of part and description	Function of part	Signal Corps stock No.
C-108, C-109	CAPACITOR, fixed: ceramic dielectric; JAN type CC30UJ220K; spec JAN-C-20; RCA part/dwg #722423-418.	C-108: Band 4 antenna secondary tuning. C-109: Band 5 antenna secondary tuning.	
C-107	CAPACITOR, fixed: ceramic dielectric; JAN type CC30UJ330K; spec JAN-C-20; RCA part/dwg #722423-422.	Bands 4 and 5 first r-f coupling.	
C-194	CAPACITOR, fixed: dry electrolytic; JAN type CE63C500G; spec JAN-C-62; RCA part/dwg #728671-156.	B-filter capacitor.	
C-193	CAPACITOR, fixed: mica; JAN type CM20B510J; spec JAN-C-5; RCA part/dwg #722002-516.	Band 2 oscillator padding.	
C-112	CAPACITOR, fixed: ceramic dielectric; JAN type CC30UJ560J; spec JAN-C-20; RCA part/dwg #722422-428.	Wavetrap tuning.	
C-156	CAPACITOR, fixed: ceramic dielectric; JAN type CC35LH680J; spec JAN-C-20; RCA part/dwg #722427-163.	Band 6 second r-f trimmer.	
C-138	CAPACITOR, fixed: ceramic dielectric; JAN type CC35PH680J) spec JAN-C-20; RCA part/dwg #722427-213.	Band 6 oscillator trimmer.	
C-136	CAPACITOR, fixed: ceramic dielectric; JAN type CC35RH750J; spec JAN-C-20; RCA part/dwg #722427-264.	Band 5 oscillator trimmer.	
C-120, C-155	CAPACITOR, fixed; ceramic dielectric; JAN type CC35LH750J; spec JAN-C-20; RCA part/dwg #722427-164.	C-120: Band 6 first r-f trimmer. C-155: Band 5 second r-f trimmer.	
C-118, C-123, C-134, C-154	CAPACITOR, fixed: ceramic dielectric; JAN type CC35RH820J; spec JAN-C-20; RCA part/dwg #722427-265,	C-118: Band 4 first r-f trimmer. C-123: Oscillator grid coupling. C-134: Band 4 oscillator trimmer. C-154: Band 4 second r-f trimmer.	
C-119	CAPACITOR, fixed: ceramic dielectric; JAN type CC35LH820J; spec JAN-C-20; RCA part/dwg #722427-165.	Band 5 first r-f trimmer.	
C-115, C-149,	CAPACITOR, fixed: ceramic dielectric; JAN type CC35UJ181J; spec JAN-C-20; RCA part/dwg #722427-423.	C-115: Band 1 first r-f tuning. C-149: Band 1 second r-f tuning.	
C-104, C-105, C-114, C-124, C-148	CAPACITOR, fixed: ceramic dielectric; JAN type CC35UJ221K; spec JAN-C-20; RCA part/dwg #722428-425.	C-104; First r-f grid coupling. C-105: Second r-f grid coupling for bands 4, 5, and 6. C-114: Second r-f grid coupling. C-124: Oscillator plate feedback. C-148: Mixer grid coupling for bands 4, 5, and 6.	
C-128	CAPACITOR, fixed: mica; JAN type CM20D511G; spec JAN-C-5; RCA part/dwg #722006-590.	Oscillator band 1 padder.	
C-174	CAPACITOR, fixed: mica; JAN type CM30D561K; spec JAN-C-5; RCA part/dwg #722021-553.	Third i-f grid coupling.	
C-130	CAPACITOR, fixed: mica; JAN type CM30D152G; spec JAN-C-5; RCA part/dwg #722022-563.	Oscillator band 2 padder.	
C-133, C-179, C-180	CAPACITOR, fixed: mica; JAN type CM30E272J; spec JAN-C-5; RCA part/dwg #722024-519.	C-133: Oscillator band 4 padder. C-179 and C-180: Audio coupling.	

Ref symbol	Name of part and description	Function of part	Signal Corps stock No.
C–132, C–135	CAPACITOR, fixed: mica; JAN type CM30E302J; spec JAN–C–5; RCA part/dwg #722024–520.	C–132: Oscillator band 3 padder. C–135: Oscillator band 5 tracking padder.	
C–181	CAPACITOR, fixed: paper dielectric; JAN type CP26A1DG302M; spec JAN–C–25; RCA part/dwg #984601–70.	Output tube frequency compensation.	
C–137	CAPACITOR, fixed: mica; JAN type CM35E392J; spec JAN–C–5; RCA part/dwg #722033–503.	Oscillator band 6 padder.	
C–101, C–111, C–113, C–121, C–139, C–140, C–141, C–143, C–153, C–182, C–183, C–184	CAPACITOR, fixed: mica; JAN type CM35D472K; spec JAN–C–5; RCA part/dwg #722030–555.	C–101: First r-f screen bypass. C–111: First r-f plate decoupling. C–113: Second r-f screen bypass. C–121: Avc bypass filter. C–139: Oscillator plate decoupling. C–140: Regulated supply bypass. C–141: Mixer cathode bypass. C–143: Mixer screen bypass. C–153: Second r-f plate decoupling. C–182 and C–183: Audio coupling to output tube. C–184: Tone control filter.	
C–167	CAPACITOR, fixed: paper dielectric; JAN type CN35A602M; spec JAN–C–91; RCA part/dwg #728681–68.	I-f gain control bypass.	
C–122A, C–122B, C–122C, C–172A, C–172B, C–172C	CAPACITOR, fixed: paper dielectric; JAN type CP53B5DF503K; spec JAN–C–25; 3 sect, c/o C–122A, C–122B, and C–122C; RCA part/dwg #984616–433.	C–122A: Avc bypass. C–122B and C–122C: Noise-limiter time constant capacitor. C–172A: Third i-f screen bypass. C–172B: Third i-f cathode bypass. C–172C: third i-f plate decoupling.	
C–144A, C–144B, C–144C, C–157A, C–157B, C–157C, C–163A, C–163B, C–163C	CAPACITOR, fixed: paper dielectric; JAN type CP53B5DF104K; spec JAN–C–25; 3 sect, c/o C–144A, C–144B, and C–144C; RCA part/dwg #984616–434.	C–144A: Second i-f avc decoupling. C–144B: Mixer plate decoupling. C–144C: First i-f avc decoupling. C–157A: Screen bypass, V–105 and V–106. C–157B: Second i-f plate decoupling. C–157C: Coupling between T–116 and T–117. C–163A: Coupling between T–114 and T–115. C–163B: First i-f plate decoupling. C–163C: Bfo plate bypass.	
C–185A, C–185B, C–185C	CAPACITOR, fixed: paper dielectric; JAN type CP53B5DF254K; spec JAN–C–25; 3 sect; c/o C–185A, C–185B, and C–185C; RCA part/dwg #984616–435.	C–185A: First audio screen grid bypass. C–185B: First audio plate decoupling. C–185C: First audio grid bypass filter.	

Ref symbol	Name of part and description	Function of part	Signal Corps stock No.
C–168	CAPACITOR, fixed: paper dielectric; JAN type CP26A1DC504M; spec JAN–C–25; RCA part/dwg #984601–54.	Second i-f cathode bypass.	
C–189	CAPACITOR, fixed: paper dielectric; JAN type CP701DF405K; spec JAN–C–25; RCA part/dwg #984033–5.	B+ third filter capacitor.	
C–190, C–191	CAPACITOR, fixed: paper dielectric; JAN type CP701DF106K; spec JAN–C–25; RCA part/dwg #984033–8.	C–190: B+ second filter capacitor. C–191: B+ first filter capacitor.	
C–147	CAPACITOR, variable: air dielectric; plate meshing type; 3 to 14 mmf; SLC characteristic; 500 v RMS test; 27/32″ lg x 15/16″ wd x 1 7/32″ h excluding shaft, bakelite shaft 1/4″ diam x 13/16″ lg FMS; sedr adj; 5 nickel pl brass plates; 360 deg clockwise rotation; ceramic ins; solder lug term; two #4–40 tapped holes on 21/32″ mtg/c; RCA part/dwg #442716–3.	CRYSTAL PHASING control.	
C–102	CAPACITOR, variable: air dielectric; plate meshing type 3 to 25 mmf; SLC characteristic; 500 v RMS test; 1 3/32″ lg x 15/16″ wd x 1 7/32″ h excluding shaft, shaft 1/4″ diam x 2 7/32″ lg FMS; extension shaft adj; 9 nickel pl brass plates; 360 deg clockwise rotation; ceramic ins; solder lug term; two #4–40 tapped holes on 21/32″ mtg/c; two piece constructed shaft; RCA part/dwg #442716–2.	ANT ADJ control.	
C–188	CAPACITOR, variable: air dielectric; plate meshing type; 6 to 75 mmf; SLC characteristic; 500 v RNS test; 1 3/32″ lg x 15/16″ wd x 1 7/32″ h excluding shaft, shaft 1/4″ diam x 1 3/4″ lg; extension shaft adj; 20 nickel pl brass plates; 360 deg clockwise rotation; ceramic ins; solder lug term; two #4–46 tapped holes on 21/32″ mtg/c; two-piece constructed shaft; RCA part/dwg #442716–6.	BFO ADJ control.	
C–103	CAPACITOR, variable: air dielectric; plate meshing type; c/o capacitors indicated below: C–103A 14 to 402.0 mmf, C–103B 11 to 60.3 mmf, C–103C 14 to 361.8 mmf, C–103D 11 to 120.6 mmf, C–103E 11 to 120.6 mmf, C–103F 14 to 361.8 mmf, C–103G 14 to 361.8 mmf, C–103H 11 to 120.6 mmf, SLF characteristic; 1000 vdct ea sect; 12″ lg x 4 1/8″ wd x 3 3/4″ h o/a, shaft 1/4″ diam x 2 3/32″ lg; extension shaft adj; sect #1 (C–103F), #3 (C–103G), and #5 (C–103C) 19 aluminum plates ea sect; sect #2 (C–103E), #4 (C–103H), and #6 (C–103D) 7 ea sect; sect #7 (C–103A) 21 plates; sect #8 (C–103D) 4 plates; clockwise 180 deg rotation; steatite ceramic ins; 8 solder lug term; 4 mtg holes 0.180″ diam on 2″ and 2.734″ x 3.687″ mtg/c on front end and one 3/8″ diam mtg hole in bottom ctr rear end; silver cont rings; silver pl wiper springs; ceramic ins wax impr; c/o two 4-sect var capacitor tandem assembled on cad pl steel mtg plate, w/flexible ins coupling connecting the 2 units; marked w/RCA part/dwg #; RSW; RCA part/dwg #92444–501.	TUNING CONTROL.	

Ref symbol	Name of part and description	Function of part	Signal Corps stock No.
C–116, C–117, C–150, C–151	CAPACITOR ASSEMBLY: c/o rotary type capacitors A, B, C, as indicated below: A: 3-13 mmf *JAN–CV11B130* B: 5-20 mmf *JAN–CV11B200* C: 5-20 mmf *JAN–CV11B200* C–116A, C–116B, C–116C C–117A, C–117B, C–117C C–150A, C–150B, C–150C C–151A, C–151B, C–151C 2 7/32″ lg x 29/32″ wd x 15/16″ d o/a; bkt mtd, 5/32″ lg x 3/64″ wd slot on 2 ends for mtg; RCA part/dwg #449259–2.	C–116A: Band 1 second r-f, h-f, trimmer. C–116B: Band 5 second r-f, h-f trimmer. C–116C: Band 6 second r-f, h-f trimmer. C–117A: Band 2 second r-f, h-f trimmer. C–117B: Band 4 second r-f, h-f trimmer. C–117C: Band 3 second r-f, h-f trimmer. C–150A: Band 1 mixer, h-f trimmer. C–150B: Band 5 mixer, h-f trimmer. C–150C: Band 6 mixer, h-f trimmer. C–151A: Band 2 mixer, h-f trimmer. C–151B: Band 4 mixer, h-f trimmer. C–151C: Band 3 mixer, h-f trimmer.	
C–126	CAPACITOR ASSEMBLY: c/o rotary type capacitors, A, B, C, as indicated below: A: 3-13 mmf *JAN–CV11B130* B: 5-20 mmf *JAN–CV11B200* C: 5-20 mmf *JAN–CV11B200* C–126A, C–126B, C–126C 2 7/32″ lg x 29/32″ wd x 15/16″ d o/a; bkt mtd, 5/32″ lg x 3/64″ wd slot on 2 ends for mtg; RCA part/dwg #449259–3.	C–126A: Band 1 oscillator, h-f trimmer. C–126B: Band 5 oscillator, h-f trimmer. C–126C: Band 6 oscillator, h-f trimmer.	
C–127	CAPACITOR ASSEMBLY: c/o rotary type capacitors, A, B, C, as indicated below: A: 3-13 mmf *JAN–CV11B130* B: 3-13 mmf *JAN–CV11B130* C: 5-20 mmf *JAN–CV11B200* C–127A, C–127B, C–127C 2 7/32″ lg x 29/32″ wd x 15/16″ d o/a; bkt mtd, 5/32″ lg x 3/64″ wd slot two ends for mtg; RCA part/dwg #449259–4.	C–127A: Band 2 oscillator, h-f trimmer. C–127B: Band 3 oscillator, h-f trimmer. C–127C: Band 4 oscillator, h-f trimmer.	
C–164	CAPACITOR ASSEMBLY: c/o rotary type capacitors A and B, as indicated below: A: 7-45 mmf *JAN–C11C450* C–164A B: 7-45 mmf *JAN–C11C450* C–164B 1 15/32″ lg x 29/32″ wd x 15/16″ d o/a; bkt mtd, 5/32″ lg x 3/64″ wd slot on two ends for mtg; RCA part/dwg #449259–1.	C–164A: Selectivity adjustment, position 5 of S–102. C–164B: Selectivity adjustment, position 4 of S–102.	
	CLIP: xtal; phosphor bronze; 11/16″ lg x 13/32″ wd x 9/32 thk o/a; 1/4″ min jaw opening; 0.120″ diam hole in bottom of clip for mtg; RCA part/dwg #8842135–1.	Grounding clip for crystal holder.	

Ref symbol	Name of part and description	Function of part	Signal Corps stock No.
L-101	COIL, RF: wavetrap; 3 pie universal wnd; sleeve shielded; 120 turns per sect of 5 strands #40 AWG Litz; 2 15/32'' lg approx x 1'' diam less term; phenolic form, iron core; form 1/2'' OD x 1 19/32'' lg; adj iron core; scdr adj from top of stud; mts by 3/8''-32 thd, 1/4'' lg bushing; 2 solder lug term mtd on opposite sides of sleeve; wax impr; RCA part/dwg #738149-1.	455-kc wavetrap.	
Z-102	COIL, RF: xtal load; c/o capacitor C-162, 150 mmf ±5%; single wnd, 6 pie; shielded, rectangular aluminum shield w/light copper pl and silver gray metallustre lacquer finish; 40 turns of 15 strands #43 AWG for sect 1, 2, 3, 4, and 50 turns for sect 5 and 6; 4 25/32'' x 1 3/8'' sq o/a; phenolic form, powdered iron core; form 7/16'' OD x 3 17/64'' lg; adj iron core; scdr adj on top of can; mts by two #6-32 spade studs on 1 5/16'' mtg/c; 6 solder lug term on bottom; wax impr; term board color-coded green; RCA part/dwg #627309-5.	Crystal loading coil.	
L-105	COIL, RF: osc band #1; single layer wnd; unshielded; L1 sect 95 1/4 turns #36 AWG; 29/32'' diam x 3 1/4'' lg o/a; phenolic form, powdered iron core; form 1/2'' OD x 2 1/8'' lg; adj powdered iron core; scdr slotted stud ctr one end; bushing mtd w/3/8''-32 thd x 1/4'' lg; 3 solder lug term opposite mtg end; wax impr; RCA part/dwg #627301-4.	Band 1 oscillator coil.	
L-106	COIL, RF: osc band #2; single layer wnd; unshielded; L1 sect 45 1/4 turns #30 AWG; 29/32'' diam x 3 1/4'' lg o/a; phenolic form, powdered iron core; from 1/2'' OD x 2 1/8'' lg; adj powdered iron core; scdr slotted stud ctr one end; bushing mtd w/3/8''-32 thd x 1/4'' lg; 3 solder lug term opposite mtg end; wax impr; RCA part/dwg #627301-5.	Band 2 oscillator coil.	
L-107	COIL, RF: osc band #3; single layer wnd; unshielded; L1 sect 17 1/4 turns #26 AWG; 29/32'' diam x 3 1/4'' lg o/a; phenolic form, powdered iron core; form 1/2'' OD x 2 1/8'' lg; adj powdered iron core; scdr slotted stud ctr one end; bushing mtd w/3/8''-32 thd x 1/4'' lg; 3 solder lug term opposite mtg end; wax impr; RCA part/dwg #627301-6.	Band 3 oscillator coil.	
L-102, L-111	COIL, RF: #4 band RF coil; single wnd, single layer wnd; unshielded; 8 9/16 turns #22 AWG wire; 2.3 mmf distributed cap, 0.023 ohm DC resistance, 0.9 uh at 1000 cyc; 2 15/16 max lg extended x 3/4'' diam o/a; polystyrene form, powdered iron core; coil form 1 7/8'' lg x 3/4'' diam o/a; adj iron core; scdr adj; mts by #8-32 thd bushing, lead lengths 1'' at start, 1 1/4'' at finish; two leads as term; grooved coil form marked in digits from 1 to 15; no color code; RCA part/dwg #738123-1.	L-102: Band 4 first r-f coil. L-111: Band 4 second r-f coil.	
L-108	COIL, RF: #4 band osc; single wnd, single layer wnd; unshielded; 10 5/16 turns #22 AWG w/CT at 6 3/16 turns; 4.0 mmf distributed cap w/CT rated 4.7 mmf, 0.027 ohm DC resistance w/CT rated 0.017 ohm, 1.7 uh at 1000 cyc w/CT rated 0.9 uh; 3 7/16'' max lg extended x 3/4'' diam o/a; polystyrene form, powdered iron core; coil form 1 7/8'' lg x 3/4'' diam o/a; adj iron core; scdr adj; mts by #8-32 thd bushing, lead lengths 2'' at start, 1 1/2'' at finish; 3 leads as term; grooved coil form marked in digits from 1 to 15; blue dot color code; RCA part/dwg #738123-4.	Band 4 oscillator coil.	

Ref symbol	Name of part and description	Function of part	Signal Corps stock No.
L-103, L-112.	COIL, RF: #5 band RF coil; single wnd, single layer wnd; unshielded; 4 9/16 turns #22 AWG wire; 2.7 mmf distributed cap, 0.014 ohm DC resistance, 0.3 uh at 1000 cyc; 2 15/16'' max lg extended x 3/4'' diam o/a; polystyrene form, powdered iron core; coil form 1 7/8'' lg x 3/4'' diam o/a; adj iron core; scdr adj; mts by #8-32 thd bushing, lead lengths 1'' at start and finish; two leads as term; grooved coil form marked in digits from 1 to 15; red dot color code; RCA part/dwg #738123-1.	L-103: Band 5 first r-f coil. L-112: Band 5 second r-f coil.	
L-109	COIL, RF: #5 band osc; single wnd, single layer wnd; unshielded; 7 3/16 turns #22 AWG w/CT at 4 7/16 turns; 3.3 mmf distributed cap w/CT rated at 4.0 mmf, 0.022 ohm DC resistance w/CT rated 0.013 ohm, 1.2 uh at 1000 cyc w/CT rated 0.5 uh; 3 7/16'' max lg extended x 3/4'' diam o/a; polystyrene form, powdered iron core; coil form 1 7/8'' lg x 3/4'' diam o/a; adj iron core; scdr adj; mts by #8-32 thd bushing, lead lengths 2'' at start, 1 1/2'' at finish; 3 leads as term; grooved coil form marked in digits from 1 to 15; green dot color code; RCA part/dwg #738123-5.	Band 5 oscillator coil.	
L-104, L-113	COIL, RF: #6 band RF coil; single wnd, single layer wnd; unshielded; 2 9/16 turns #22 AWG wire; 2.8 mmf distributed cap, 0.014 ohm DC resistance, 0.3 uh at 1000 cyc; 2 15/16'' max lg extended x 3/4'' diam o/a; polystyrene form, powdered iron core; coil form 1 7/8'' lg x 3/4'' diam o/a; adj iron core; scdr adj; mts by #8-32 thd bushing, lead lengths 1'' at start and finish; 2 leads as term; grooved coil form marked in digits from 1 to 15; white dot color code; RCA part/dwg #728123-1.	L-104; Band 6 first r-f coil. L-115: Band 6 second r-f coil.	
L-110	COIL, RF: #6 band osc; single wnd, single layer wnd; unshielded; 5 1/16 turns #22 AWG wire w/CT at 2 3/16 turns; 2.3 mmf distributed cap w/CT rated at 3.7 mmf, 0.010 ohm DC resistance w/CT rated 0.006 ohm, 0.8 uh at 1000 cyc w/CT rated 0.3 uh; 3 7/16'' max lg extended x 3/4'' diam o/a; polystyrene form, powdered iron core; coil form 1 7/8'' lg x 3/4'' diam o/a; adj iron core; scdr adj; mts by #8-32 thd bushing, lead lengths 1'' at start, 1 1/4'' at finish; 3 leads as term; grooved coil form marked in digits from 1 to 15; orange dot color code; RCA part/dwg #738123-6.	Band 6 oscillator coil.	
J-101	CONNECTOR, receptacle: AN Receptacle UG-185/U; female one end; one female cont; straight; adapter for AN Radio Frequency Receptacle UG-58/U cable; 13/16'' lg x 3/4'' sq base approx o/a; 50 ohms; cylindrical brass body, silver pl, locking type; cable opening 0.043'' diam; mts by four 0.136'' diam holes on 0.531'' mtg/c in base; RCA part/dwg #719876-3.	Diversity monitor connection---	2Z7390-185
Y-101	CRYSTAL UNIT, quartz: one xtal; 455 kc ±0.02%; temp range −10° to +50° C; 2 pins 0.050'' diam spaced 0.486'' c to c on bottom, oval body 0.720'' lg x 0.345'' wd x 0.765'' h excluding 0.205'' lg pins; operate any position; RCA part/dwg #8842106-1.	I-f crystal filter.	
J102	JACK, telephone: for 2 cond plug 1/4'' diam; 2 5/8'' lg x 5/8'' wd x 15/16'' h o/a; cont arrangement J2-1C; mtg bushing 3/8''-32 thd x 3/8'' lg; 3/8'' mtg hole required; Mallory per RCA spec #897781; RCA part/dwg #897702-1.	PHONES jack.	

Ref symbol	Name of part and description	Function of part	Signal Corps stock No.
	KNOB: round; black molded compound; for ¼″ diam shaft; 2 holes tapped for #10–32 set screw; 2⅛″ diam x 1¼″ h o/a; brass insert; ⅝″ d shaft hole; 8 equally spaced indents; ctb ⅞″ diam x 3/16″ d; RCA part/dwg #712336–503.	Main tuning dial.	
	KNOB: round; black molded compound; for ¼″ diam shaft; 2 holes tapped for #8–32 set screw; 1½″ diam x ⅞″ h o/a; brass insert; 9/16″ d shaft hole; 8 equally spaced indents; ctb 11/16″ diam x ⅛″ d; single white line; RCA part/dwg #712336–505.	Knob for RANGE switch, SELECTIVITY switch, power-transmit-receive switch, and noise limiter—ave switch.	
	KNOB: round; black molded compound; for ¼″ diam shaft; single hole tapped for #8–32 set screw; 1 1/16″ diam x ⅝″ h o/a; brass insert; ½″ d shaft hole; 8 equally spaced indents; ctb ⅝″ diam x 3/32″ d; single white line; RCA part/dwg #712336–507.	Knob for HF TONE, ANT ADJ, RF GAIN, AF GAIN, BFO ADJ, CRYSTAL PHASING, and NOISE LIMITER controls.	
	KNOB: round; black molded phenolic compound; for ¼″ diam shaft; double #8–32 set screws; marked DIVERSITY IF GAIN; 1″ diam x ⅝″ h; brass insert; ½″ d shaft hole; 8 equally spaced indents; single white line; RCA part/dwg #868236–4.	DIVERSITY IF GAIN control knob.	
J–103, J–104, J–105	LAMPHOLDER: miniature bayonet; steel body; 6.3 v, 0.25 amp, 1.6 w; 27/32″ lg x 13/16″ wd x ½″ thk o/a; mts by mtg clip; inverted mtg clip located parallel to and beside socket; two solder lug term extend in opposite directions from base; Dialco part #701; RCA part/dwg #8843727–1.	J–103: Tuning dial lampholder. J–104: Vernier dial lampholder. J–105: Nameplate window lampholder.	
E–104, E–105, E–106	LAMP, incandescent: 6–8 v 1.6 w; bulb T–3¼ clear; 1⅛″ lg o/a; miniature bayonet base; ¾ cp, 3000 hr life; burn any position; Mazda #44; RCA part/dwg #61114–15.	Lamps for J–103, J–104, and J–105.	2Z5927
L–120, L–121	REACTOR: filter choke; one sect; 13 hy at 30 v 60 cyc 0.090 amp DC; 400 ohms DC resistance; 2000 v hi-pot test between case and core to wnd; HS metal can, 3340 turns 0.0063E wire; 2 27/32″ sq x 3 9/32″ max h o/a excluding term; four 0.180″ diam holes on 2 7/16″ x 2 7/16″ mtg/c; two solder lug term on mtg surface; 105 ma max current; RCA part/dwg #949083–1.	L–120: First filter choke. L–121: Second filter choke.	
R–147	RESISTOR, fixed: WW; JAN type RW55J5RO; spec JAN–R–26; RCA part/dwg #722488–618.	Loading resistor for output transformer when using phones.	
R–108, R–118, R–139, R–140	RESISTOR, fixed: WW; JAN type RU3B100J; spec JAN–R–184; RCA part/dwg #722381–250.	R–108: Band 1 second r-f grid parasitic suppressor. R–118: Band 1 mixer grid parasitic suppressor. R–139 and R–140: Noise-limiter filament dropping resistors.	
R–101, R–126, R–162	RESISTOR, fixed: WW; JAN type RU3B150K; spec JAN–R–184; RCA part/dwg #722381–254.	R–101: First r-f plate parasitic suppressor. R–126: Cathode resistor second i-f stage. R–162: Bias voltage divider.	
R–160	RESISTOR, fixed: WW; JAN type RW55J101; spec JAN–R–26; RCA part/dwg #722488–631.	Bias voltage divider.	
R–122, R–150	RESISTOR, fixed: comp; JAN type RC20BF101K; spec JAN–R–11; RCA part/dwg #722318–50.	R–122: Cathode resistor first i-f stage. R–150: Cathode resistor first a-f stage.	3RC20BF101K
R–161	RESISTOR, fixed: WW; JAN type RW55J161; spec JAN–R–26; RCA part/dwg #722488–633.	Bias voltage divider.	

Ref symbol	Name of part and description	Function of part	Signal Corps stock No.
R-129	RESISTOR, fixed: comp; JAN type RC20BF391K; spec JAN-R-11 RCA part/dwg #722318-57.	Cathode resistor third i-f stage.	
R-114	RESISTOR, fixed: comp; JAN type RC20BF561K; spec JAN-R-11; RCA part/dwg #722318-59.	Cathode resistor mixer tube.	
R-104, R-113, R-117, R-120, R-123, R-127, R-128, R-131	RESISTOR, fixed: comp; JAN type RC20BF102K; spec JAN-R-11; RCA part/dwg #722318-62.	R-104: First r-f plate filter decoupling. R-113: Oscillator plate filter decoupling. R-117: Mixer plate filter decoupling. R-120: Second r-f plate filter decoupling. R-123: First i-f plate filter decoupling. R-127: Second i-f plate filter decoupling. R-128: Third i-f screen filter decoupling. R-131: Third i-f plate filter decoupling.	3RC20BF102K
R-159	RESISTOR, fixed: WW; JAN type RW55J252; spec JAN-R-26; RCA part/dwg #722488-645.	Voltage regulator dropping resistor.	
R-146	RESISTOR, fixed: comp; JAN type RC20BF272K; spec JAN-R-11; RCA part/dwg #722318-67.	Feedback (audio) resistor	3RC20BF272K
R-109, R-119, R-164	RESISTOR, fixed: comp; JAN type RC20BF562K; spec JAN-R-11; RCA part/dwg #722318-71.	R-109: Band 2 primary shunting resistor, first rf. R-119: Band 2 primary shunting resistor, second rf. R-164: Minimum bias resistor.	3RC20BF562K
R-112, R-154	RESISTOR, fixed: comp; JAN type RC20BF103K; spec JAN-R-11; RCA part/dwg #722318-74.	R-112: H-f oscillator plate load R-154: Bfo plate dropping.	3RC20BF103K
R-136, R-165	RESISTOR, fixed: comp; JAN type RC20BF333K; spec JAN-R-11; RCA part/dwg #722318-80.	R-136: Part of diode load R-165: Mixer screen dropping resistor.	3RC20BF333K
R-103, R-107	RESISTOR, fixed: comp; JAN type RC20BF473K; spec JAN-R-11; RCA part/dwg #722318-82.	R-103: First r-f screen dropping resistor. R-107: Second r-f screen droping resistor.	3RC20BF473K
R-111	RESISTOR, fixed: comp; JAN type RC20BF563K; spec JAN-R-11; RCA part/dwg #722318-83.	Oscillator grid leak	3RC20BF563K
R-121	RESISTOR, fixed: comp; JAN type RC20BF823K; spec JAN-R-11; RCA part/dwg #722318-85.	Crystal loading coil (L-114) shunt.	3RC30BF823K
R-110, R-115, R-149	RESISTOR, fixed: comp: JAN type RC20BF104K; spec JAN-R-11; RCA part/dwg #722318-86.	R-110: Avc filter resistor R-115: Mixer oscillator grid leak. R-149: First audio plate filter.	3RC30BF104K
R-148	RESISTOR, fixed: comp; JAN type RC20BF274K; spec JAN-R-11; RCA part/dwg #722318-91.	First audio plate load.	
R-145	RESISTOR, fixed: comp; JAN type RC20BF334K; spec JAN-R-11; RCA part/dwg #722318-92.	Output tube grid return	3RC20BF334K
R-143	RESISTOR, fixed: comp; JAN type RC20BF394K; spec JAN-R-11; RCA part/dwg #722318-93.	R-f gain isolating resistor	3RC20BF394K
R-125, R-141, R-156, R-157, R-158	RESISTOR, fixed: comp; JAN type RC20BF564K; spec, JAN-R-11; RCA part/dwg #722318-95.	R-125: Second i-f grid avc isolating. R-141: Noise-limiter diode loading. R-156: First i-f grid avc isolating. R-157 and R-158: B+ bleeder.	3RC20BF564K

Ref symbol	Name of part and description	Function of part	Signal Corps stock No.
R-132	RESISTOR, fixed: comp; JAN type RC20BF684K; spec JAN-R-11; RCA part/dwg #722318-96.	Noise-limiter time constant resistor.	3RC20BF684K
R-105, R-106, R-134, R-153	RESISTOR, fixed: comp; JAN type RC20BF105K; spec JAN-R-11; RCA part/dwg #722318-98.	R-105: Antenna grounding (when link is open). R-106: Second r-f grid return. R-134: Screen grid bleeder for avc delay. R-153: First audio grid filter.	3RC20BF105K
R-151	RESISTOR, fixed: comp; JAN type RC20BF155K; spec JAN-R-11; RCA part/dwg #722138-100.	First a-f screen dropping resistor.	
R-102, R-130, R-133, R-137, R-152	RESISTOR, fixed: comp; JAN type RC20BF225K; spec JAN-R-11; RCA part/dwg #722318-102.	R-102: First r-f grid return. R-130: Third i-f grid return. R-133: Screen grid bleeder for avc delay. R-137: Avc time constant resistor. R-152: First audio grid return.	3RC20BF225K
R-138	RESISTOR, fixed: comp; JAN type RC20BF106K; spec JAN-R-11; RCA part/dwg #722318-110.	Avc delay-voltage isolating.	
R-124	RESISTOR, variable; comp; 5,000 ohms ±10%; 3 solder lug term; 1⅛" diam x 9/16" d metal case, closed; round, metal; ¼" diam x 5/16" lg shaft; linear; ins cont arm w/o off position; normal torque; ⅜"-32 thd x ⅜" lg bushing; nonturn device located on 17/32" rad at 3 o'clock; RCA part/dwg #441392-16.	DIVERSITY IF GAIN control.	
R-135, R-163	RESISTOR, variable: comp; 66,000 ohms ±10%; 3 solder lug term; 1⅛" diam x 9/16" d metal case; closed; round, metal, ¼" diam x 1 5/16" lg shaft; linear; ins cont arm; w/o off position; normal torque; ⅜"-32 thd x ⅜" lg bushing; nonturn device located on 17/32" rad at 3 o'clock; RCA part/dwg #441392-7.	R-135: NOISE LIMITER control. R-163: RF GAIN control.	
R-144	RESISTOR, variable: comp; 1 meg ±20%; 3 solder solder lug term; 1⅛" diam x 9/16" d metal case; closed; round; metal; ¼" diam x 1¼" lg shaft; linear; ins cont arm; w/o off position; normal torque; ⅜"-32 thd x ⅜" lg bushing; nonturn device located on 17/32" rad at 3 o'clock; RCA part/dwg #441392-2.	HF TONE control.	
R-142	RESISTOR, variable: comp; 2 meg ±20%; 3 solder lug term; 1⅛" diam x 9/16" d metal case; closed; round, metal; ¼" diam x 5/16" lg shaft; linear; ins cont arm; w/o off position; normal torque; ⅜"-32 thd x ⅜" lg bushing; nonturn device located on 17/32" rad at 3 o'clock; RCA part/dwg #441392-15.	AF GAIN control.	
X-115	SOCKET, crystal: for xtal having 0.050" diam pins and 0.486" spacing between pins; ceramic body, cad pl phosphor bronze cont; oval body w/two cylindrical inserts; approx 55/64" lg x ⅜" wd x ⅜" h excluding 19/64" lg cont; mts by one 0.125" diam hole in ctr; Eby type C.R-7 w/phosphor bronze cont; RCA part/dwg #8885952-2.	Crystal socket.	
X-103, X-104, X-109	SOCKET, tube: octal; one piece saddle mtg; two #6-32 holes on 1.625" mtg/c; round steatite body 1¼" diam x 15/32" h excluding term; beryllium copper silver pl cont; key located at 135 deg; RCA part/dwg #441395-502.	X-103: H-f oscillator tube socket. X-104: Mixer tube socket. X-109: Noise-limiter tube socket.	
X-101, X-102	SOCKET, tube: octal; one piece saddle mtg; two #6-32 holes on 1.625" mtg/c; round steatite body 1¼" diam x 15/32" h excluding term; beryllium copper silver pl cont; key located at 360 deg; RCA part/dwg #441395-503.	X-101: First r-f tube socket. X-102: Second r-f tube socket.	

Ref symbol	Name of part and description	Function of part	Signal Corps stock No.
X–105 thru X–108, X–110 thru X–114	SOCKET, tube: octal; one piece saddle mtg; two #6–32 holes on 1.625″ mtg/c; round steatite body 1¼″ diam x 15/32″ h excluding term; beryllium copper silver pl cont; key located at 225 deg; RCA part/dwg #441395–504.	X–105: First i-f tube socket. X–106: Second i-f tube socket. X–107: Third i-f tube socket. X–108: Second detector avc tube socket. X–110: First audio tube socket. X–111: Output tube socket. X–112: Bfo tube socket. X–113: Voltage regulator tube socket. X–114: Rectifier tube socket.	
S–104	SWITCH, rotary: c/o 3 pole, 4 position and SPST, S–104A and S–104B; single wafer sect and power sw; SPST power sw rated 1 amp 250 v or 3 amp 125 v; silver cont; phenolic body; 1⅜″ lg x 1 33/64″ wd x ⅞″ h; shorting type cont; locking action; solder lug term; mts by bushing ⅜″–32 thd x ⅜″ lg, shaft ¼″ diam x 1 13/16″ lg FMS; RCA part/dwg #442715–2.	Power-transmit-receive switch.	
S–105	SWITCH, rotary: single pole, 8 positions; 250 v max; brass cont w/nickel pl; black bakelite body integral w/steel saddle; 1⅞″ lg x 1½″ wd x 1 15/32″ thk approx o/a; 9 solder lug term; saddle mtd w/two 0.156″ diam holes 1½″ c to c; marked w/110–125–150–220–240 on positions 1 to 5 w/positions 6 to 8 left blank; Amphenol cat. #36–1, except molded material to agree w/JAN P–14 type MTS–E–4; RCA part/dwg #99585–3.	Primary voltage tap switch.	
S–103	SWITCH, rotary: 2 pole, 4 position; single sect; silver cont; phenolic body; 23/32″ lg x 1 33/64″ wd x 1⅞″ h excluding shaft; shorting type cont; locking action; solder lug term; mts by ⅜″–32 thd x ⅜″ lg bushing, shaft ¼″ diam x 1 13/16″ lg FMS; marked w/#442717–1; RCA part/dwg #442717–1.	Noise-limiter—avc switch.	
S–102	SWITCH, rotary: c/o 4 pole 5 position w/special cont arrangement, S–102A and S–102B; 2 sect; silver cont; steatite low loss ceramic; 9 7/32″ lg x 3 7/16″ wd x 3 19/32″ h excluding shaft; shaft ¼″ diam x 1 13/16″ lg; shorting type cont; detent action; solder lug term; front mts by ⅜″–32 thd x ⅜″ lg bushing, rear mts by 3 mtg studs 5/16″ lg located on steel shield; cad pl steel shield on rear; nonturn device at 3 o'clock on 17/32″ rad on front end; marked w/#449205–1; c/o S–102A and S–102B; RCA part/dwg #449205–1.	I-f SELECTIVITY switch.	
S–101	SWITCH, rotary: range sw; c/o of 8 wafer, S–101A to S–101H incl; 16 sect sw; 16 pole, 6 position; silver cont, silver faced, steatite low loss ceramic; 11 9/16″ lg x 8¾″ wd x 3 27/32″ h excluding shaft; 32 #6–32 x 5/16″ lg mtg studs, 19 on top and 13 on bottom irregularly spaced; mtg bushing on shaft w/⅜″–32 x ⅜″ lg thd; marked w/RCA part/dwg #738151–1; shorting type cont; detent action; solder lug term; nonturn device at 12 o'clock on 17/32″ rad; all ins wax impr; rust resistant; RCA part/dwg #738151–1.	RANGE switch.	

Ref symbol	Name of part and description	Function of part	Signal Corps stock No.
T–119	TRANSFORMER, AF: plate coupling type; pri 8000 ohms impedance, 25 ma max current rating; HS metal case, silicon steel core; 2 9/32'' sq x 2 25/32'' max h o/a excluding term; turns ratio: pri to secd #1 – 55: 1 ±3%, pri to secd #1 and #2—10.9: 1 ±3%, pri to secd #3—3.5: 1 ±3%; freq response −3 db at 120 cyc, and −0.5 db at 4000 cyc; 7 solder lug term on mtg fl; four 0.180'' diam holes on 1 7/8'' x 1 7/8'' mtg/c; RCA part/dwg #949077–1.	Output coupling.	
Z–108	TRANSFORMER, IF: 455 kc; BFO; contains capacitors and resistor indicated below: C–186 3300 mmf JAN CM30E332J, C–187 56 mmf JAN CM25D560J, R–155 120 ohms, ½ w JAN RC21BE124K; shielded; 4¼'' lg x 1¾'' wd x 1⅜'' d approx o/a; powdered iron core; tuned secd only; adj iron core tuning; mts by two #6–32 thd spade type studs on 1 5/16'' mtg/c; 6 solder lug term on bottom; RCA part/dwg #449260–1.	Bfo tuning assembly.	
Z–101	TRANSFORMER, IF: 455 kc; first IF; c/o capacitors, transformer, and resistor indicated below: C–145 680 mmf ±5% JAN CM30E681J, C–146 680 mmf ±5% JAN CM30E681J, R–116 15,000 ohms ±10%, ½ w JAN RC21BE153K, T–113 transformer; shielded; 4 25/32'' x 1⅜'' sq o/a; powdered iron core; double tuned; adj iron core tuning; mts by two #6–32 spade studs on 1 5/16'' mtg/c; 8 solder lug term, 6 on bottom, 2 on top; wax impr; bottom term board color-coded black; RCA part/dwg #627309–1.	First i-f transformer.	
Z–103 thru Z–106	TRANSFORMER, IF: 455 kc; second and third IF; c/o capacitors indicated below: Z–103 {C–158 680 mmf ±5%; C–161 680 mmf ±5%} Z–104 {C–159 680 mmf ±5%; C–160 680 mmf ±5%} Z–105 {C–169 680 mmf ±5%; C–170 680 mmf ±5%} Z–106 {C–171 680 mmf ±5%; C–173 680 mmf ±5%} shielded; 4 25/32'' x 1⅜'' sq o/a; powdered iron core; double tuned; adj iron core tuned; mts by two #6–32 spade studs on 1 5/16'' mtg/c; 9 solder lug term, 6 on bottom, 3 on top; wax impr; bottom term board color-coded orange; RCA part/dwg #627309–3.	Z–103 and Z–104: Coupling assembly, first to second i-f stages. Z–105 and Z–106: Coupling assembly, second to third i-f stages.	
Z–107	TRANSFORMER, IF: 455 kc; fourth IF; c/o capacitors indicated below: C–176 180 mmf ±5% JAN CM20B181J, C–177 180 mmf ±5% JAN CM20B181J, C–178 180 mmf ±5% JAN CM20B181J, shielded; 4 25/32'' x 1⅜'' sq o/a; powdered iron core; double tuned; adj iron core tuning; mts by two #6–32 spade studs on 1 5/16'' mtg/c; 8 solder lug term, 6 on bottom, 2 on top; wax impr; bottom term board color-coded red; RCA part/dwg #627309–2.	Fourth i-f transformer.	

Ref symbol	Name of part and description	Function of part	Signal Corps stock No.
T-120	TRANSFORMER, power: fil and plate type; input 125/240 v 60 cyc single ph, 110/125/150/210/240 v tap pri, 125 v rated 0.89 amp, 240 v pri rated 0.462 amp; 3 output wnd; secd #1 term 11 and 13 CT12 rated 690/340 v at 0.10 amp DC, secd #2 term 9 and 10 rated 6.45 v 4.5 amp, secd #3 term 7 and 8 rated 5.0 v 2.0 amp; secd #2 rated 1000 v hi-pot, all others rated 2500 v hi-pot; air-cooled; HS metal case; case 4 13/32'' max lg x 4 9/32'' max wd x 5 21/32'' max h o/a excluding term and studs; 13 solder lug term on bottom; four 1/4''-20 studs on 3'' x 3 1/8'' mtg/c; operative ambient temp range 0° to 50° C; RCA part/dwg #949081-1.	Power transformer. *	
T-102	TRANSFORMER, RF: #2 band ant coil; 2 wnd, single layer; unshielded; sect L1, 40 turns #30 AWG; sect L2, 19 turns #30 AWG; 0.531'' diam x 3'' lg o/a; polystyrene form, powdered iron core; form 0.531'' diam x 1 7/8'' lg; adj iron core; scdr adj through base of form; mts by 3/8''-32 thd bushing; 4 wire leads; color-coded; RCA part/dwg #738136-1.	Band 2 antenna coil.	
T-103	TRANSFORMER, RF: #3 band ant coil; 2 wnd, single layer; unshielded; sect L1, 15 turns #26 AWG; sect L2, 10 turns #30 AWG; 0.531'' diam x 3'' lg o/a; polystyrene form, powdered iron core; form 0.531'' diam x 1 7/8'' lg; adj iron core; scdr adj through base of form; mts by 3/8''-32 thd bushing; 4 wire leads; color-coded; RCA part/dwg #738136-2.	Band 3 antenna coil.	
T-104	TRANSFORMER, RF: #4 band ant coil; 2 wnd, single layer; unshielded; sect L1, 10 turns #26 AWG; sect L2, 10 turns #30 AWG; 0.531'' diam x 3'' lg o/a; polystyrene form, powdered iron core; form 0.531'' diam x 1 7/8'' lg; adj iron core; scdr adj through base of form; mts by 3/8''-32 thd bushing; 4 wire leads; color-coded; RCA part/dwg #738136-3.	Band 4 antenna coil.	
T-105	TRANSFORMER, RF: #5 band ant coil; 2 wnd, single layer; unshielded; sect L1, 7 turns #30 AWG; sect L2, 7 turns #24 AWG; 0.531'' diam x 3'' lg o/a; polystyrene form, powdered iron core; form 0.531'' diam x 1 7/8'' lg; adj iron core; acdr adj through base of form; mts by 3/8''-32 thd bushing; 4 wire leads; color-coded; RCA part/dwg #738136-4.	Band 5 antenna coil.	
T-106	TRANSFORMER, RF: #6 band ant; 2 wnd, single layer wnd; unshielded; pri 3 1/8 turns #22 AWG wire, secd 5 1/8 turns #22 AWG wire; ea 3.7 mmf distributed cap, pri 0.012 ohm secd 0.016 ohm DC resistance, pri 0.3 uh, secd 0.5 uh at 1,000 cyc; 2 15/16'' max lg extended x 3/4'' diam o/a; polystyrene form, powdered iron core; coil form 1 7/8'' lg x 3/4'' diam o/a; adj iron core; scdr adj; mts by #8-32 thd bushing, lead lengths pri 1 3/4'', secd 1 1/4'' start, 1'' finish; 4 leads as term; grooved coil form marked in digits from 1 to 15; black dot color code; RCA part/dwg #738123-6.	Band 6 antenna coil.	

Ref symbol	Name of part and description	Function of part	Signal Corps stock No.
T-101	TRANSFORMER, RF: ant band #1; 2 wnd, L1 pri 1 pie and L2 secd 6 pie universal wnd; unshielded; L1 sect 400½ turns #38 AWG; L2 sect 20 turns, 15 strands #43 Litz; 29/32" diam x 3¼" lg o/a; phenolic form, powdered iron core; form ½" OD x 2⅛" lg; adj powdered iron core; acdr slotted stud ctr one end; bushing mtd w/⅜"-32 thd x ¼" lg; 3 solder lug term opposite mtg end; one term colored green; wax impr; RCA part/dwg #627301-1.	Band 1 antenna coil.	
T-107, T-110	TRANSFORMER, RF: RF band #1; 2 wnd, L1 sect 1 pie, L2 sect 5 pie universal wnd; unshielded; L1 sect 400 ½ turns #38 AWG; 29/32" diam x 3¼" lg o/a; phenolic form, powdered iron core; form ½" OD x 2⅛" lg; adj powdered iron core; sedr slotted stud ctr one end; bushing mtd w/⅜"-32 thd x ¼" lg; 4 solder lug term opposite mtg end; one term colored green; wax impr; RCA part/dwg #627301-7.	T-107: Band 1 first r-f coil. T-110: Band 1 second r-f coil.	
T-108, T-111	TRANSFORMER, RF: RF band #2; 2 wnd, L1 secd 1 pie universal wnd, L2 pri single layer wnd; unshielded; L1 sect 200 turns #36 AWG universal wnd; L2 sect 37 turns #30 AWG layer wnd; 29/32" diam x 3¼" lg o/a; phenolic form, powdered iron core; form ½" OD x 2⅛" lg; adj powdered iron core; sedr slotted stud ctr one end; bushing mtd w/⅜"-32 thd x ¼" lg; 4 solder lug term opposite mtg end; RCA part/dwg #627301-2.	T-108: Band 2 first r-f coil. T-111: Band 2 second r-f coil.	
T-109, T-112	TRANSFORMER, RF: RF band #3; 2 wnd, L1 secd 1 pie universal wnd, L2 pri single layer wnd; unshielded; L1 sect 90 turns #36 AWG universal wnd; L2 sect 15 ½ turns #26 AWG layer wnd; 29/32" diam x 3¼" lg o/a; phenolic form, powdered iron core; form ½" OD x 2⅛" lg; adj powdered iron core; sedr slotted stud ctr one end; bushing mtd w/⅜"-32 thd x ¼" lg; 4 solder lug term opposite mtg end; one term colored green; wax impr; RCA part dwg #627301-3.	T-109: Band 3 first r-f coil. T-112: Band 3 second r-f coil.	
V-114	TUBE, electron: JAN type 5Y3GT; full-wave vacuum rectifier.	Rectifier.	2J5Y3GT
V-113	TUBE, electron: JAN type OD3/VR150; voltage regulator, glow-discharge type, cold.	Voltage regulator.	2JOD3/VR150
V-110	TUBE, electron: JAN type 6SJ7; triple-grid detector-amplifier.	First a-f amplifier.	2J6SJ7
V-101, V-102, V-105, V-106, V-107	TUBE, electron: JAN type 6SG7; remote cut-off pentode.	V-101: First r-f amplifier. V-102: Second r-f amplifier. V-105: First i-f amplifier. V-106: Second i-f amplifier. V-107: Third i-f amplifier.	2J6SG7
V-104	TUBE, electron: JAN type 6SA7; pentagrid converter.	Mixer tube.	2J6SA7
V-111	TUBE, electron: JAN type 6K6GT; power pentode.	Audio output amplifier.	2J6K6GT
V-103, V-112	TUBE, electron: JAN type 6J5; detector-amplifier triode.	V-103: H-f oscillator. V-112: Bfo.	2J6J5
V-108, V-109	TUBE, electron: JAN type 6H6; twin diode.	V-108: Second detector and avc. V-109: Noise limiter.	2J6H6

Ref symbol	Name of part and description	Function of part	Signal Corps stock No.
	TUNING UNIT, RF: tuning unit for Radio Receiver R-320/FRC c/o: base plate assem, RCA dwg#738152-501 tuning unit, RCA dwg #92417-4 gang covers, RCA dwg #95554-502 end shields, RCA dwg #95561-503 end shields, RCA dwg #95561-504 front shield, RCA dwg #95558-3 top shield, RCA dwg #253658-3 term board, RCA dwg #897193-1 tubes (2) V-102 JAN-6SG7; (1) V-103 JAN-6J5; (1) V-104 JAN-6SA7; 0.540 to 32 mc freq of 6 bands; rectangular shape; 13″ lg x 9 3/16″ wd x 6″ h approx o/a; 310 avg gain from ant to grid of 1st IF; RCA part/dwg #311038-70.	R-f tuner assembly.	
	WINDOW: clear transparent plastic; flat rectangular sheet; 11 21/32″ lg x 3″ wd x 0.060″ thk; four 0.144″ diam mtg holes, csk on back surface, 2 7/8″ x 2 5/8″ mtg ctr; four elongated mtg holes 0.1345″ lb x 0.144″ wd on 2.0625″, 1.375″, 3.125″ c to c 3/16″ from top edge and three elongated mtg holes 0.1345″ lg x 0.144″ wd 2.40625″, 3.125″ c to c 3/16″ from lower edge; two 0.136″ diam holes 13/32″ c to c below middle window; marked w/RCA part/dwg #; three clear irregular windows and clear border, all remaining surface black opaque print on back surface; RCA part/dwg #26979-2.	To protect dials.	

RESISTOR COLOR CODES

RMA COLOR CODE FOR FIXED COMPOSITION RESISTORS*

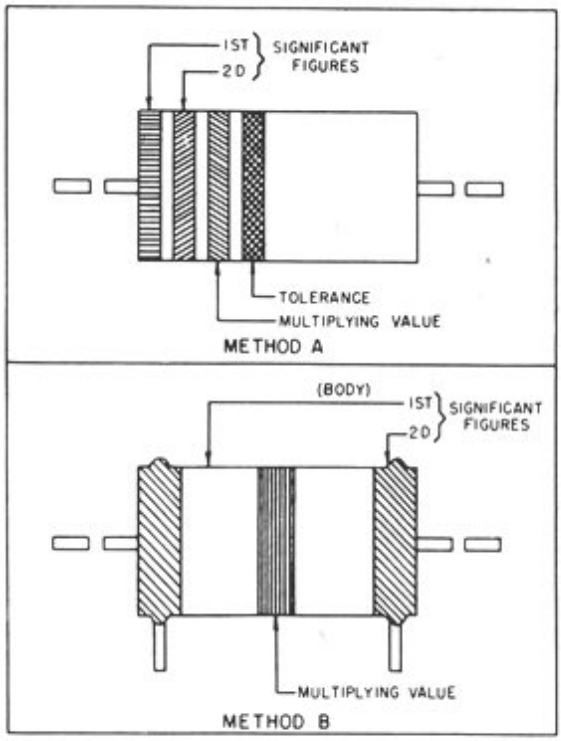

A

JAN COLOR CODE FOR FIXED COMPOSITION RESISTORS†

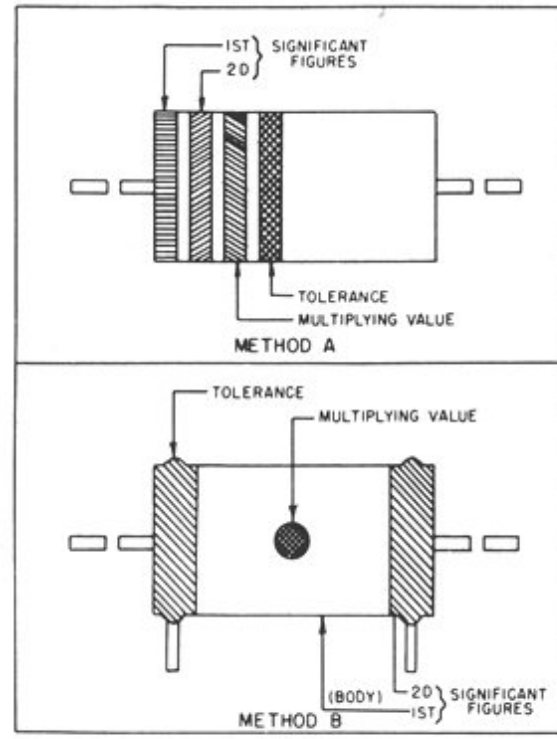

B

COLOR	SIGNIFICANT FIGURE	MULTIPLYING VALUE	TOLERANCE (%)
BLACK	0	1	± –
BROWN	1	10	± 1
RED	2	100	± 2
ORANGE	3	1,000	± 3
YELLOW	4	10,000	± 4
GREEN	5	100,000	± 5
BLUE	6	1,000,000	± 6
VIOLET	7	10,000,000	± 7
GRAY	8	100,000,000	± 8
WHITE	9	1,000,000,000	± 9
GOLD	–	0.1	± 5
SILVER	–	0.01	± 10
NO COLOR	–	–	± 20

NOTES

* INSULATED FIXED COMPOSITION RESISTORS WITH AXIAL LEADS ARE DESIGNATED BY A NATURAL TAN BACKGROUND COLOR. NON-INSULATED FIXED COMPOSITION RESISTORS WITH AXIAL LEADS ARE DESIGNATED BY A BLACK BACKGROUND.

† RESISTORS WITH AXIAL LEADS ARE INSULATED. RESISTORS WITH RADIAL LEADS ARE NON-INSULATED.

RMA: RADIO MANUFACTURERS ASSOCIATION

JAN: JOINT ARMY-NAVY

THESE COLOR CODES GIVE ALL RESISTANCE VALUES IN OHMS.

TL 32454S

Figure 42. Resistor color codes.

CAPACITOR COLOR CODES

RMA 3-4-5-&6-DOT COLOR CODES FOR MICA-DIELECTRIC CAPACITORS

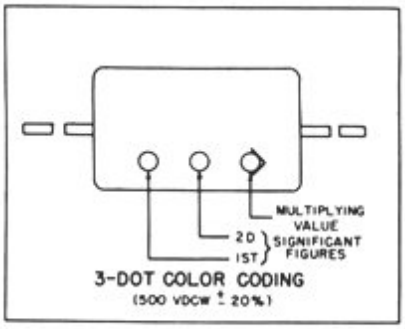

A

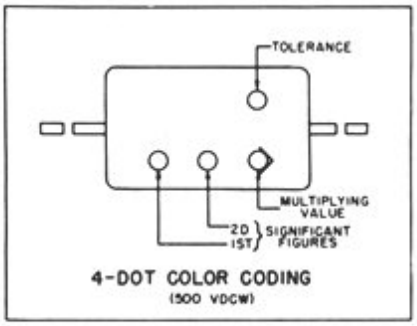

B

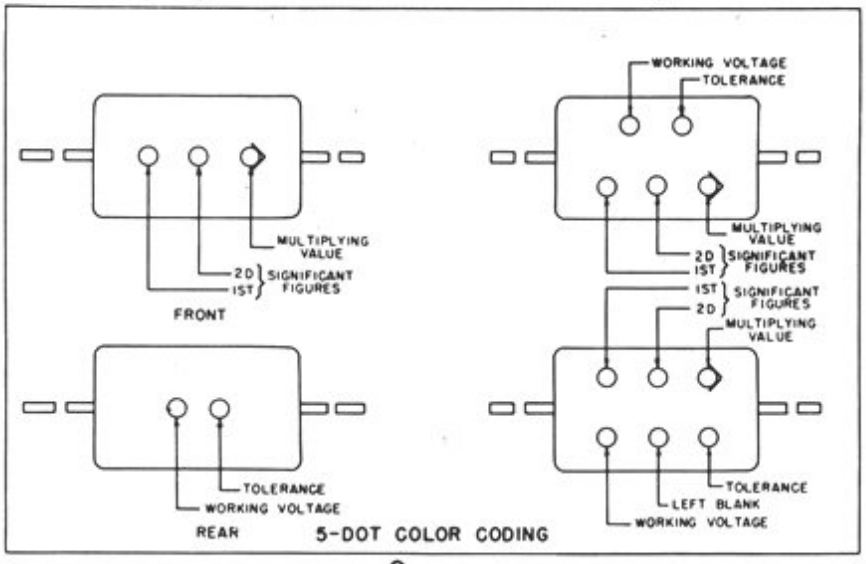

C

JAN 6-DOT COLOR CODES FOR:

PAPER-DIELECTRIC CAPACITORS *

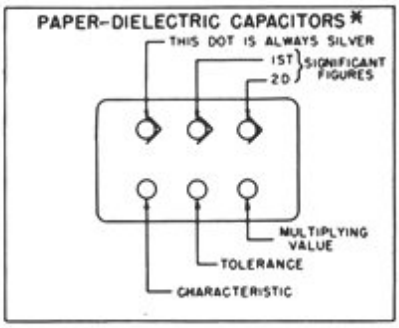

F

MICA-DIELECTRIC CAPACITORS ≠

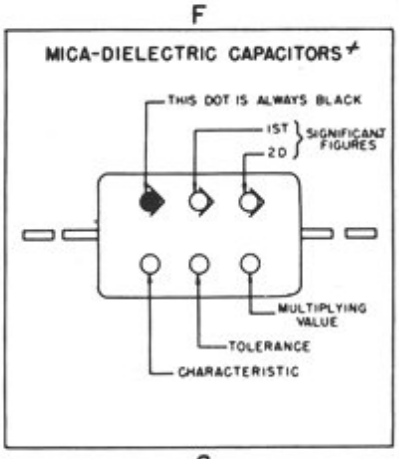

G

CERAMIC-DIELECTRIC CAPACITORS **

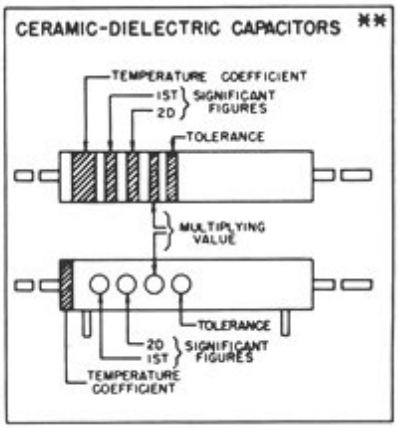

H

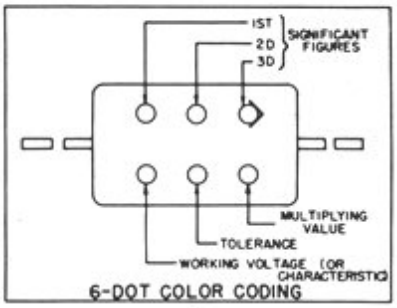

D

RMA COLOR CODE FOR TUBULAR CERAMIC-DIELECTRIC CAPACITORS

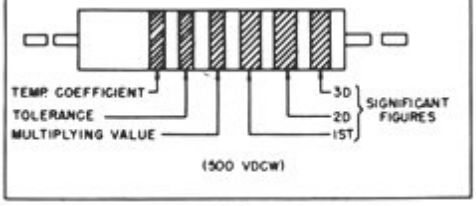

E

COLOR	SIGNIFICANT FIGURE	MULTIPLYING VALUE: RMA MICA- AND CERAMIC-DIELECTRIC	MULTIPLYING VALUE: JAN MICA- AND PAPER-DIELECTRIC	MULTIPLYING VALUE: JAN CERAMIC-DIELECTRIC	RMA VOLTAGE RATING
BLACK	0	1	1	1	-
BROWN	1	10	10	10	100
RED	2	100	100	100	200
ORANGE	3	1,000	1,000	1,000	300
YELLOW	4	10,000	10,000		400
GREEN	5	100,000			500
BLUE	6	1,000,000			600
VIOLET	7	10,000,000			700
GRAY	8	100,000,000		0.01	800
WHITE	9	1,000,000,000		0.1	900
GOLD	-	0.1	0.1		1,000
SILVER	-	0.01	0.01		2,000
NO COLOR	-				500

NOTES

* THE SILVER DOT IDENTIFIES THIS MARKING. FOR WORKING VOLTAGES SEE JAN TYPE DESIGNATION CODE.

≠ THE BLACK DOT IDENTIFIES THIS MARKING. FOR WORKING VOLTAGES SEE JAN TYPE DESIGNATION CODE.

** CAPACITORS MARKED WITH THIS CODE HAVE A VOLTAGE RATING OF 500 VDCW. EITHER THE BAND OR DOT CODE MAY BE USED FOR BOTH INSULATED (AXIAL-LEAD) OR UNINSULATED (RADIAL-LEAD) CAPACITORS.

RMA RADIO MANUFACTURERS ASSOCIATION

JAN: JOINT ARMY-NAVY

THESE COLOR CODES GIVE CAPACITANCES IN MICROMICROFARADS.

TL 324535

Figure 43. Capacitor color codes.

INDEX

	Paragraph	Page
A-f amplifier stages:		
Testing	61	46
Theory	47	35
Alinement	67, 68, 69	54, 55, 60
Antenna	11*b*	8
Automatic volume control stage:		
Testing	72*j*	65
Theory	44	30
Bandswitching	39	23
Beat-frequency oscillator stage:		
Adjustment	69*d*	62
Testing	72*c*	63
Theory	46	34
Cleaning	51	37
Components	5	2
Connections	11	5
Controls	13	9
Crystal filter	40	26
C-w reception	15*a*	12
Demolition	75, 76	66
Description	7	4
Detector stage:		
Testing	62	47
Theory	44	30
Disassembly	65, 73	51, 66
Diversity reception	11*d*	8
Equipment for testing	49, 55, 67, 71	37, 40, 54, 63
Equipment performance checklist	32	18
Forms	2	1
Frequency range	4	2
Headphones	11*e*	8
H-f oscillator stage:		
Alinement	69	60
Bandswitching	39	23
Testing	63	50
Theory	37	23
I-f amplifier stages:		
Alinement	68	55
Testing	62, 72*b*	47, 63
Theory	40, 41, 42	26, 28
Inspecting	30, 51	17, 37
Lubrication	26	15
Maintenance:		
Prerepair	49, 50, 51, 52	37, 38
Preventive	23, 24, 25	15
Replacement of parts	65	51
Trouble-shooting data	54	39
Materials	49	36
Mixer stage:		
Bandswitching	39	23
Testing	63	50
Theory	38	23
Modulated reception	15*b*	12
Noise-limiter stage:		
Testing	72*i*	65
Theory	45	33
Operation:		
Arctic	18	13
Desert	20	13
Operations—Continued		
Tropical	19	13
Under usual conditions	15	12
Oscillator:		
Beat-frequency	46	34
H-f	37	23
Packaging	6, 74	2, 66
Painting	28	17
Parts, replaceable	App. II	69
Power supply stage:		
Testing	57, 72*k*	40, 65
Theory	48	36
Purpose	3	1
Reception:		
C-w	15*a*	12
Diversity	11*d*	8
Modulated	15*b*	12
Records	2	1
References	App. I	67
Refinishing	66	54
Repairs	65	51
R-f amplifier stages:		
Alinement	69	60
Bandswitching	39	23
Testing	63	50
Theory	35, 36	20, 22
Rustproofing	28	17
Scope	1	1
Selectivity switching system	43	30
Shipment	74	66
Signal substitution	60, 62, 63	45, 47, 50
Siting	9	5
Speaker	11*c*	8
Stage-gain data	64	50
Starting procedure	14	11
Stopping procedure	16	12
Storage	74	66
Technical characteristics	4	2
Test equipment	49, 55, 67, 71	37, 40, 54, 63
Testing:		
Equipment	49, 55, 67, 71	37, 40, 54, 63
Final	70, 71, 72	62, 63
Operational	58	41
Power supply	57	40
Prerepair	51	37
Procedures in trouble shooting	53	39
Theory, general	33, 34	20
Tools	21, 22, 49	14, 37
Trouble shooting:		
At field and depot maintenance level	53, 54	39
At organizational level	29, 30, 31	17
Equipment	55	40
Trouble-shooting chart	59	41
Tuning unit, repair	65	51
Unpacking	10	5
Weatherproofing	27	15

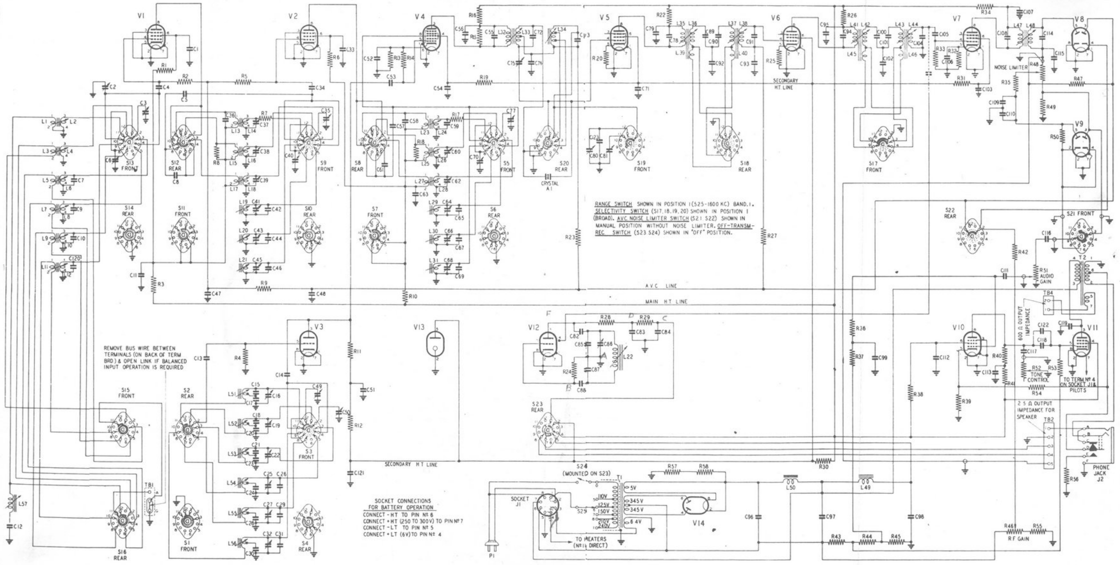

REMOVE BUS WIRE BETWEEN TERMINALS (ON BACK OF TERM BRD.) & OPEN LINK IF BALANCED INPUT OPERATION IS REQUIRED

RANGE SWITCH SHOWN IN POSITION 1 (525-1600 KC) BAND.1. SELECTIVITY SWITCH (S17, 18, 19, 20) SHOWN IN POSITION 1 (BROAD). AVC NOISE LIMITER SWITCH (S21 S22) SHOWN IN MANUAL POSITION WITHOUT NOISE LIMITER. OFF-TRANSM-REC. SWITCH (S23 S24) SHOWN IN "OFF" POSITION.

SOCKET CONNECTIONS FOR BATTERY OPERATION

CONNECT - HT TO PIN Nº 6
CONNECT + HT (250 TO 300V) TO PIN Nº 7
CONNECT - LT TO PIN Nº 5
CONNECT + LT (6V) TO PIN Nº 4

FIG. 1001. CIRCUIT DIAGRAM

AR 88

END